KitchenAid®

Dishwasher

MODELS:

KDPS724SBE2 (Black Ore)

© 2026 KitchenAid
Part No. W11859577 Rev. A

DOOR AND PANEL PARTS

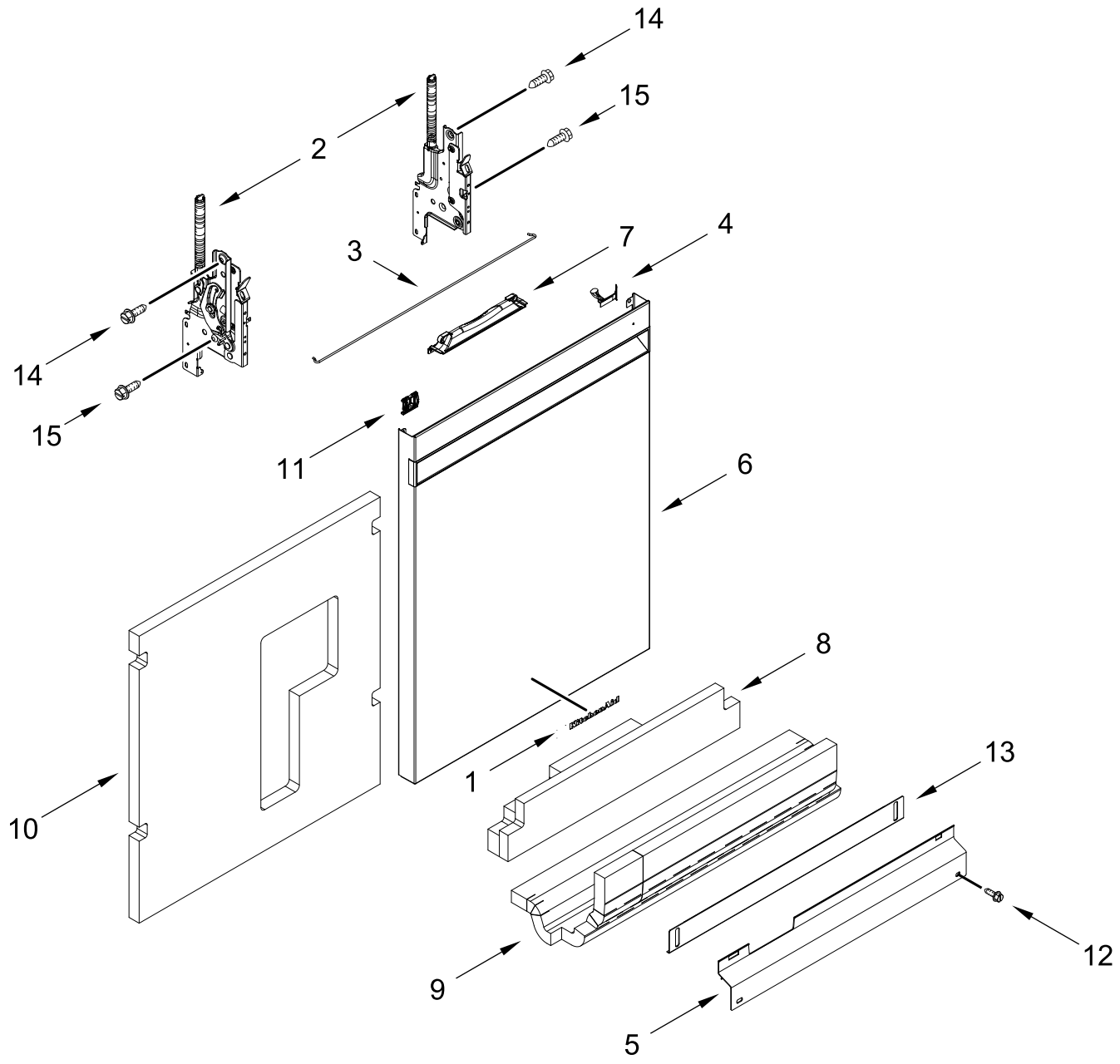

DOOR AND PANEL PARTS

Illus. No.	Part No.	Description
1	W11749368	Badge
2	W11721083	Arm, Hinge (Left)
	W11721082	Arm, Hinge (Right)
3	W11377160	Cross Brace, Door
4	W11102920	Light Pipe
5	W11108979	Access Panel (Black)
6	W11723373	Panel, Front (Black Ore, Includes Badge, Barrel Nut, Light Pipe and Pocket Handle)
7	W11825178	Handle, Pocket (Black)
8	W10919858	Insulation, Multi-Layer
9	W11038694	Insulation, Single Layer
10	W10919859	Insulation, Front Panel
11	W10692757	Barrel Nut, Front Panel
12	W11438978	Screw (Black)
13	W11467733	Toe Panel (Black)
14	W11364953	Screw
15	3400000	Screw

CONTROL PANEL AND INNER DOOR PARTS

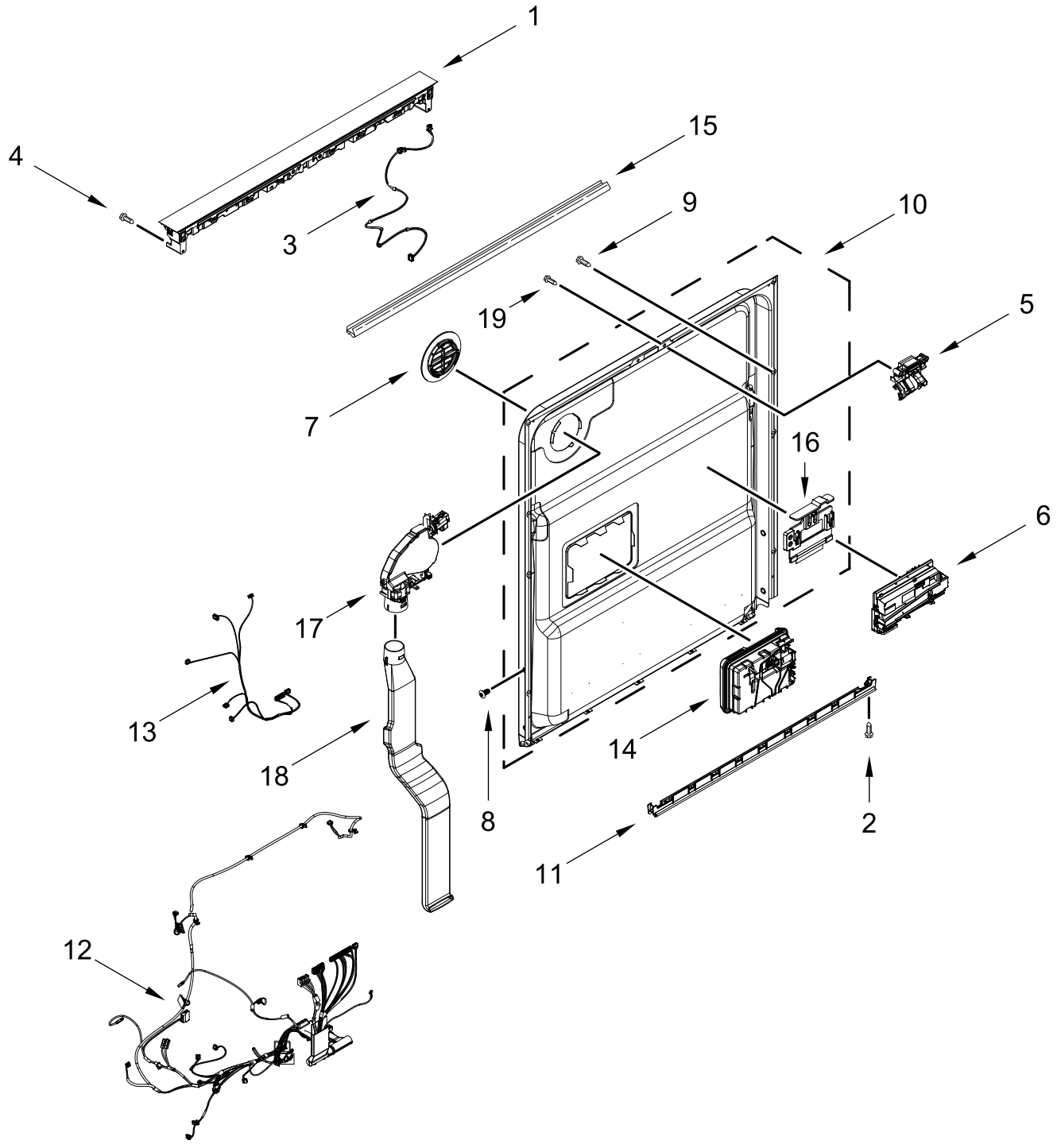

CONTROL PANEL AND INNER DOOR PARTS

Illus. No.	Part No.	Description
1	W11718790	Console Assembly (Black, Includes Insert)
2	W11258418	Screw
3	W11336943	Jumper, Door
4	W10711884	Screw
5	W11091934	Latch Assembly (Includes Switch)
6	W11808505	Control, Electronic
7	W11713860	Bezel, Vent
8	W11714324	Screw
9	W10348409	Screw
10	W11749163	Inner Door Assembly
11	W11563231	Seal, Door Bottom
12	W11795143	Wiring Harness, Main (Includes Thermostat)
13	W11084867	Wiring Harness, Inner Door
14	W11092649	Dispenser Assembly
15	W11050927	Seal, Console/Door
16	W11088985	Hanger, Control
17	W11038720	Vent Assembly (Includes Fan)
18	W11038734	Duct, Vent
19	W10348408	Screw

TUB AND FRAME PARTS

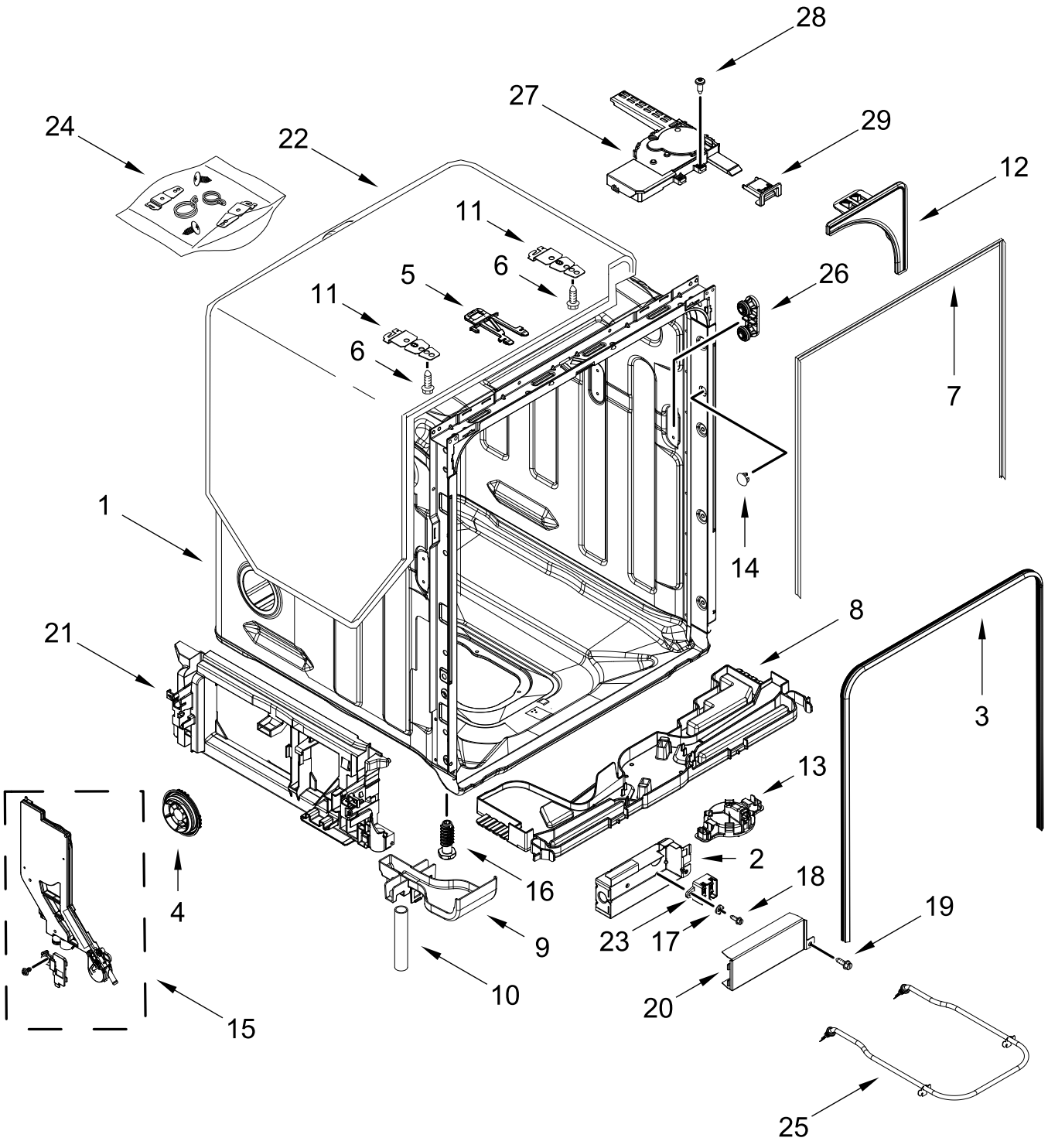

TUB AND FRAME PARTS

Illus. No.	Part No.	Description
1	W11120458	Tub Assembly (includes gasket)
2	W11790726	Base, Terminal Box
3	W11035860	Gasket, Tub
4	W11429974	Nut, Water Inlet
5	W11090487	Strike, Latch
6	W11296374	Screw
7	W11753995	Seal, Cabinet
8	W11025993	Drip Tray
9	W11025986	Funnel, Overfill Protection
10	W11025988	Funnel Extension
11	8269145	Bracket, Undercounter
12	W11165093	Cover, Tub Corner
13	W11255994	Float Switch
14	W11184083	Plug, Tub
15	W11429970	Water Inlet Assembly
16	W11455395	Leg, Leveling
17	3378128	Washer, Pronged Cup
18	3400014	Screw, Grounding
19	W10277003	Screw
20	W11793873	Cover, Terminal Box
21	W10920122	Side Support, Tub (Left)
	W10920120	Side Support, Tub (Right)
22	W11158115	Shield, Tub Sound
23	W11132441	Terminal Block
24	W11770375	Miscellaneous Parts Bag (Contains 2 Screws, 2 Clamps, & 2 Brackets)
25	W11536143	Heater Element Assembly
26	W11048217	Tub Mount, Upper Rack
27	W11725055	System, Door Opening
28	W11716258	Screw
29	W11697506	Guide, Door Opening System

PUMP, WASHARM AND MOTOR PARTS

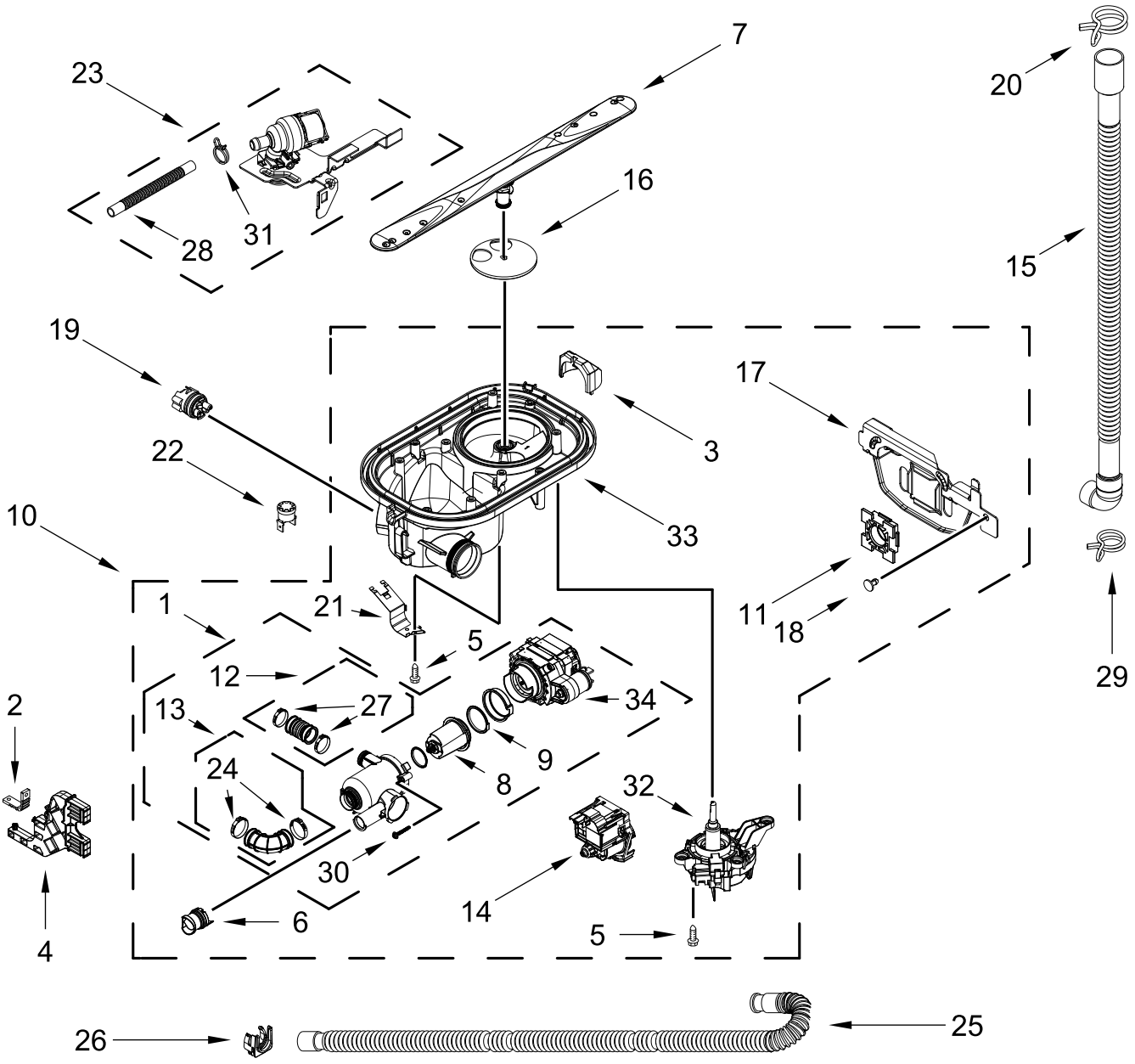

PUMP, WASHARM AND MOTOR PARTS

Illus. No.	Part No.	Description
1	W11122133	Pump Assembly
2	W11294352	Isolator, Front Motor
3	W10891545	Diffuser, Inlet
4	W11294350	Hanger, Front Motor
5	9741232	Screw
6	W10891547	Check Valve, Drain
7	W11789941	Wash Arm Assembly
8	W11108699	Filter Assembly
9	W10380239	Ring, Volute
10	W11345228	Motor & Sump Assembly
11	W11036663	Isolator, Rear Motor
12	W11250985	Hose, Pressure
13	W10900387	Hose, Suction
14	W11035709	Motor, Drain
15	W11131184	Hose, Drain
16	W10903468	Disc, Diverter
17	W11025963	Bracket, Rear Motor
18	W11418271	Fastener
19	W11126174	Indicator, Optical Wash
20	370445	Clamp, Hose
21	W11163419	Bracket, Thermostat
22	W11193089	Thermostat (Included with Main Wiring Harness)
23	W11025970	Fill Valve Assembly
24	W11122851	Clamp, Hose
25	W11036161	Hose
26	W11795523	Clip, Hose
27	W10466656	Clamp, Hose
28	W11036287	Hose, Inlet
29	W11236576	Clamp, Hose
30	W10467002	Screw
31	W11758980	Clamp, Hose
32		Diverter Valve Motor (Not Serviced)
33	W11034556	Sump (includes Seal and Diverter)
34	W10753070	Capacitor

UPPER WASH AND RINSE PARTS

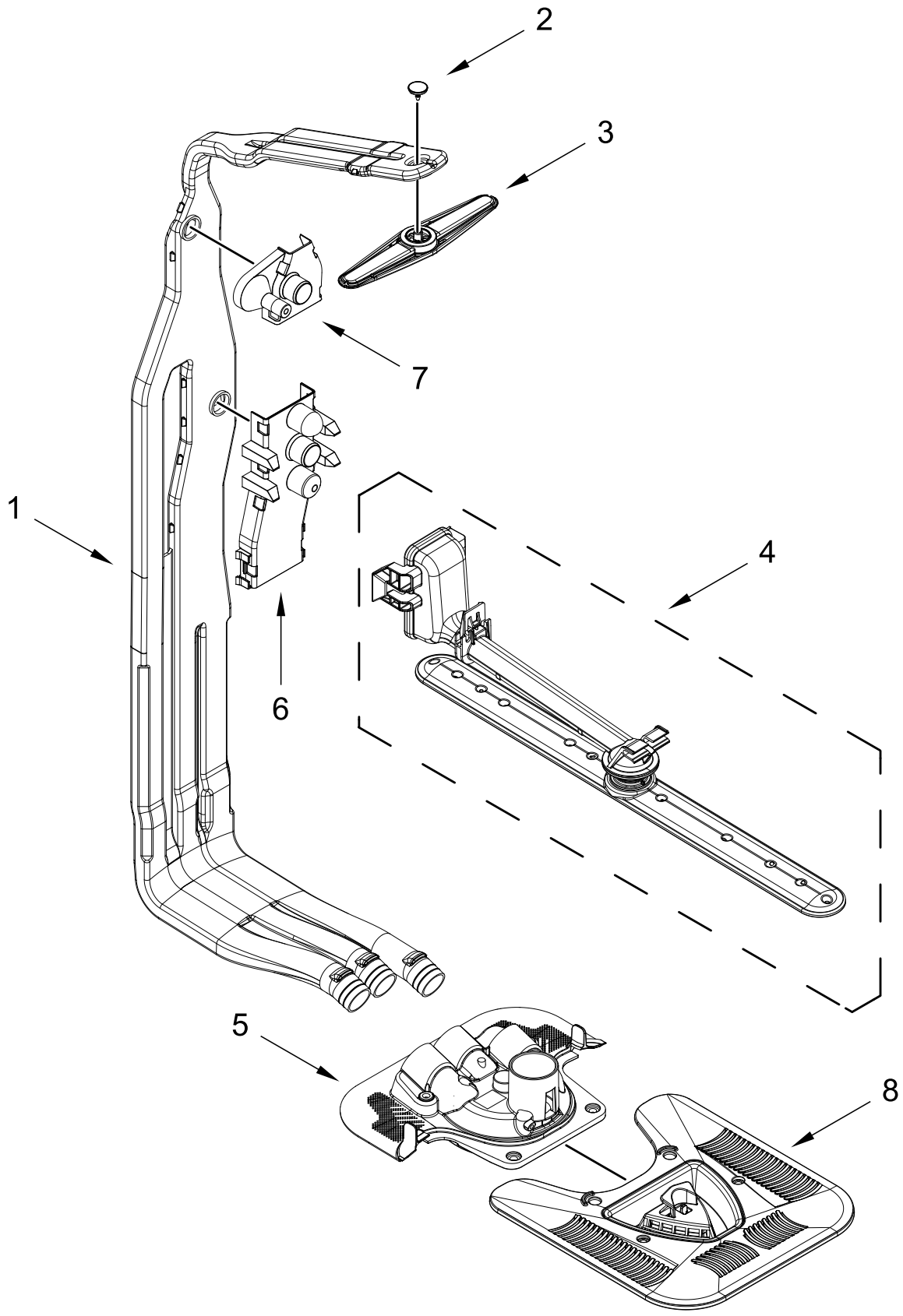

UPPER WASH AND RINSE PARTS

Illus. No.	Part No.	Description
1	W10872558	Feed Tube Assembly
2	W11039888	Retainer
3	W11039869	Sprayarm, Third Level
4	W11789943	Upper Sprayarm Assembly
5	W10903465	Cover, Diverter
6	W10892836	Retainer, Docking (2nd Level)
7	W10892835	Retainer, Docking (3rd Level)
8	W11039864	Grate

UPPER RACK AND TRACK PARTS

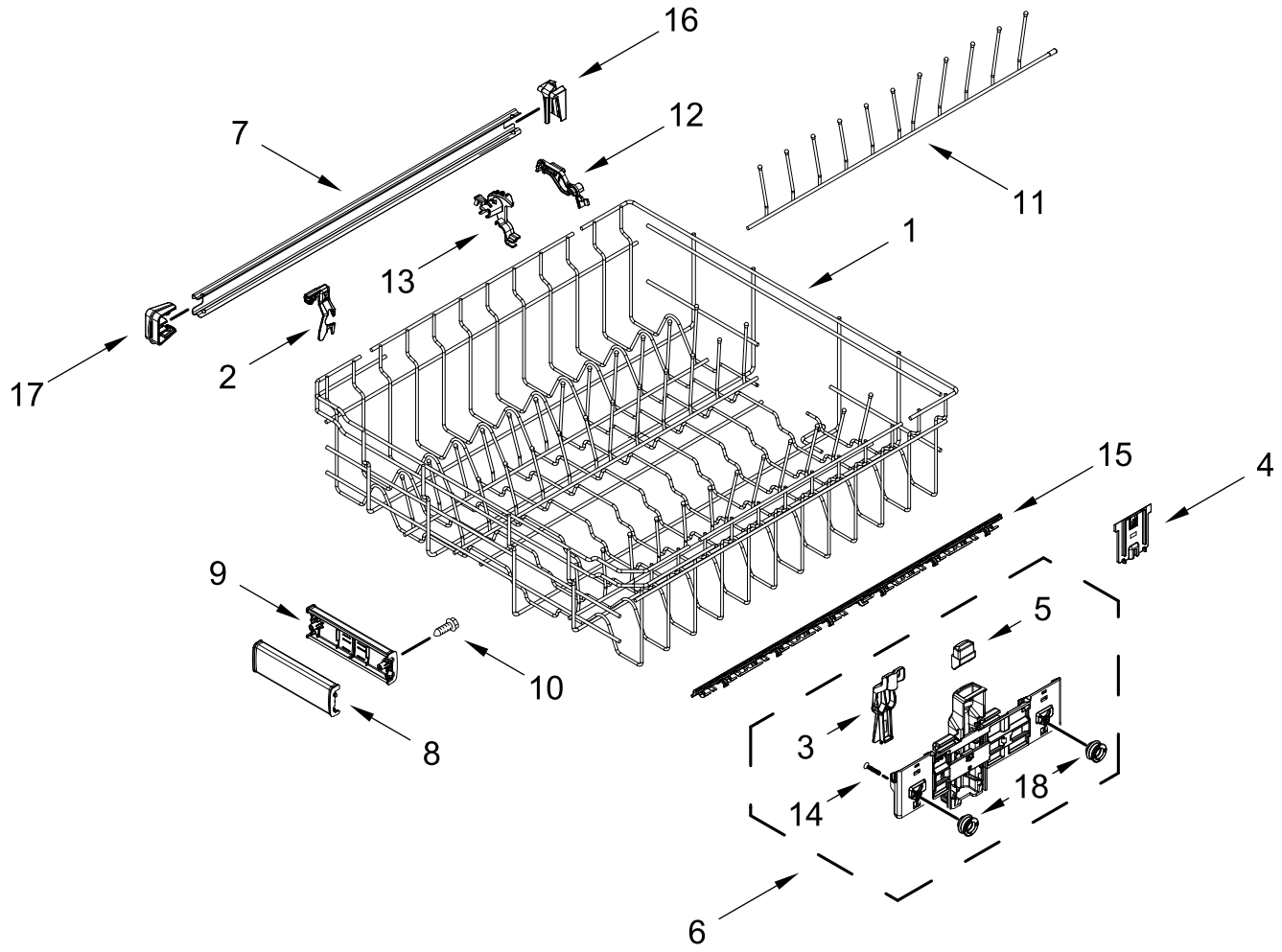

UPPER RACK AND TRACK PARTS

Illus. No.	Part No.	Description
1	W11807557	Dishrack, Upper
2	W11310289	Clip, Stemware
3	W11180178	Leveler, Adjuster Arm
4	W11180605	Clip, Adjuster Arm
5	W11267699	Button, Adjuster Arm
6	W11268090	Rack Adjuster (Left)
	W11268086	Rack Adjuster (Right)
7	W11441109	Track, Dishrack
8	W11788224	Handle, Dishrack Front
9	W11268681	Handle, Dishrack Rear
10	9741232	Screw
11	W11807564	Tine Row, Fold Down
12	W11179753	Clip, Pivot
13	W11711814	Positioner
14	W11376395	Screw
15	W11699937	Shield, Stemware
16	W11084872	Track Stop, Rear
17	W11084874	Track Stop, Front
18	W11048221	Wheel

LOWER RACK PARTS

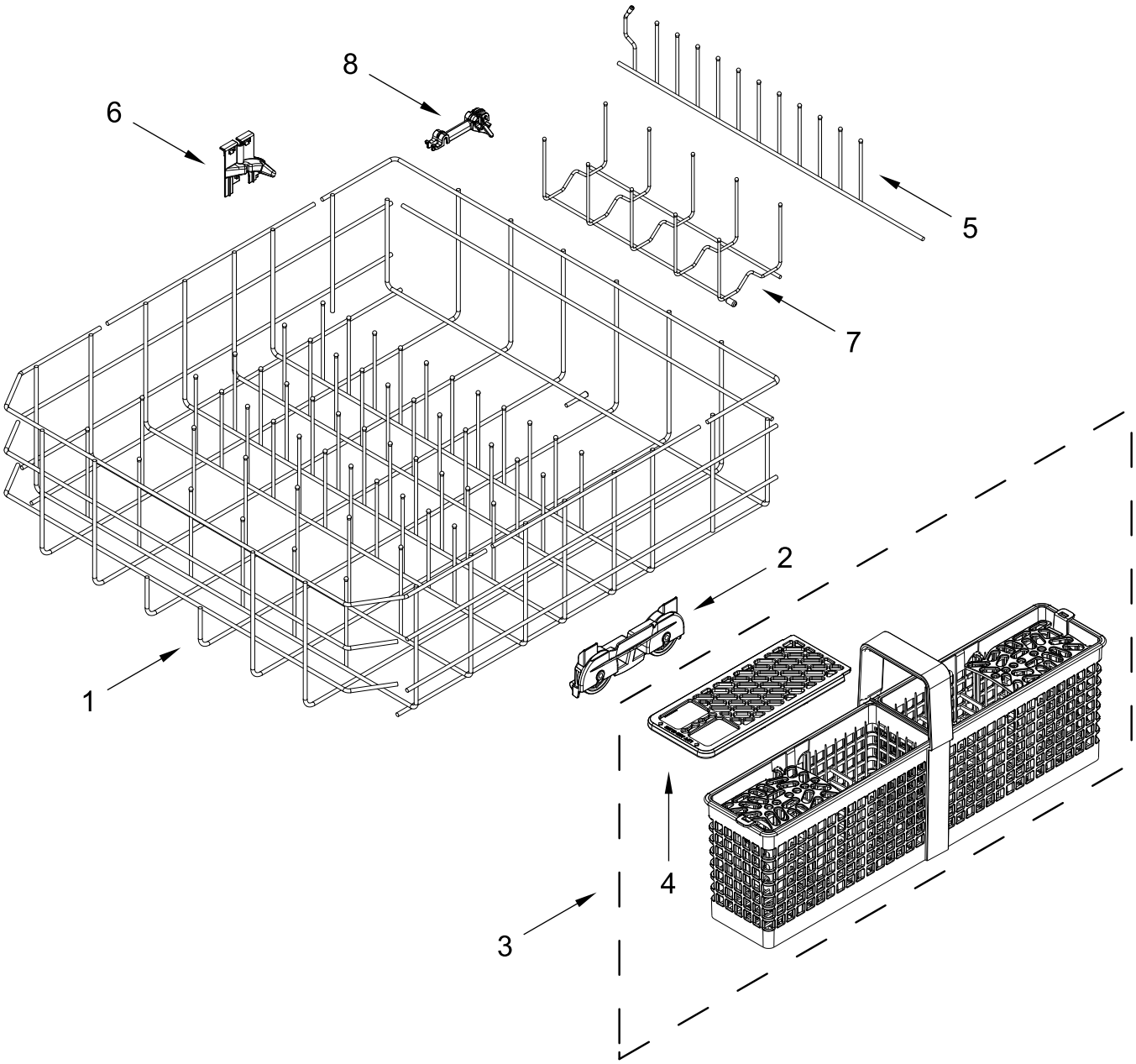

LOWER RACK PARTS

Illus. No.	Part No.	Description
1	W11224324	Dishrack, Lower
2	W11133747	Wheel and Transport Assembly
3	W11740267	Silverware Basket Assembly
4	W11713830	Lid, Silverware Basket
5	W10056272	Tine Row, Fold Down
6	W11268659	Retainer, Flex Row
7	W11505859	Tine Row, Sliding
8	W11711813	Retainer, Sliding Tine Row

THIRD LEVEL RACK AND TRACK PARTS

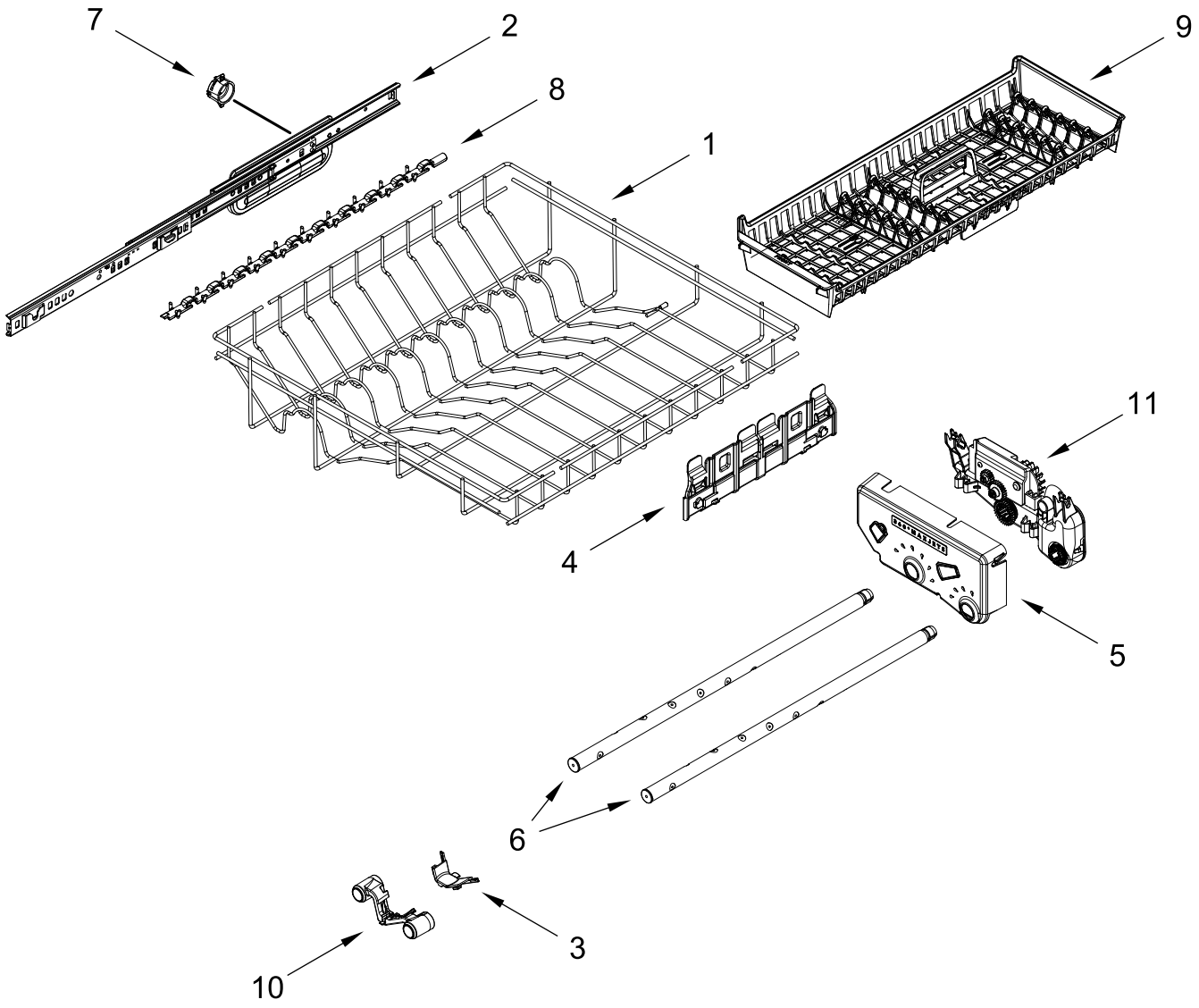

THIRD LEVEL RACK AND TRACK PARTS

Illus. No.	Part No.	Description
1	W11807560	Rack, Third Level
2	W11047813	LED Lit Track Assembly (Left)
	W11047815	LED Lit Track Assembly (Right)
3	W11184071	Hanger, Tube
4	W11130709	Mount, Dishrack
5	W11749485	Cover, Wash Tube
6	W11774244	Tube, Wash
7	W10920244	Nut, Tub
8	W11202101	Cup Guard
9	W11783632	Silverware Tray
10	W10830577	Bracket, Front Hanger
11	W10830523	Drive Box Assembly, Manifold

OPTIONAL PARTS (NOT INCLUDED)

Illus. No.	Part No.	Description
	4396277	Moisture Barrier Kit
	W11381654	External Drain Hose, 12ft
	W11365011	Power Cord Kit (Straight)
	W11365014	Power Cord Kit (Right Angle)
	4396672	Strain Relief, Power Cord (Metallic)
	W10685193	Compression Hose Fitting, Water Line
	W10278635RP	Fill Hose Kit
	W11766885	Paint, Touch-up (Black Ore, 1/2 oz)