REFRIGERATOR

MODELS:

WRT112CZJW01 (White)

© 2026 Whirlpool Corporation
Part No. W11659466 Rev. B

CABINET PARTS

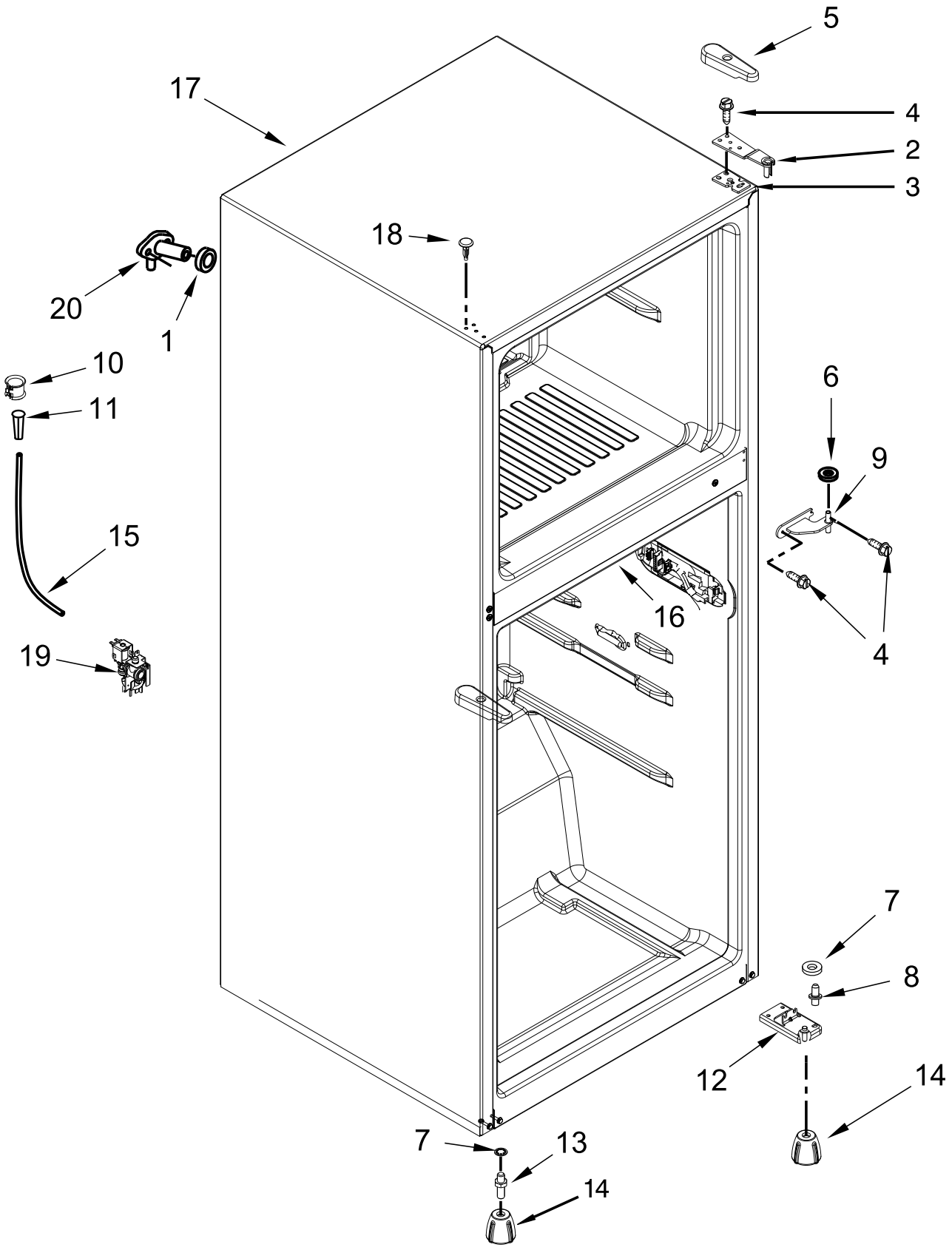

CABINET PARTS

Illus. No.	Part No.	Description
1	1106508	Gasket, Seal
2	W11191773	Assembly, Top Hinge
3	W10399311	Shim, Top Hinge
4	489497	Screw
5	W11467695	Hinge Cover (White)
6	487576	Washer, Plastic
7	489341	Washer, Plastic
8	W11183254	Pin, Hinge (Bottom)
9	W11173998	Hinge, Center
10	W10329003	Clamp, Tube
11	2181939	Insert, Tube
12	W11217747	Assembly, Bottom Hinge
13	R-30039	Screw, Leveler
14	W11176400	Leg, Leveler
15	2181944	Tube, Water
16		Rail, Center (Not Serviced)
17		Cabinet (Not Serviced)
18	W10520304	Plug, Hole (White)
19	W10498976	Valve, Inlet
20	W11265079	Fitting, Water Tube

LINER PARTS

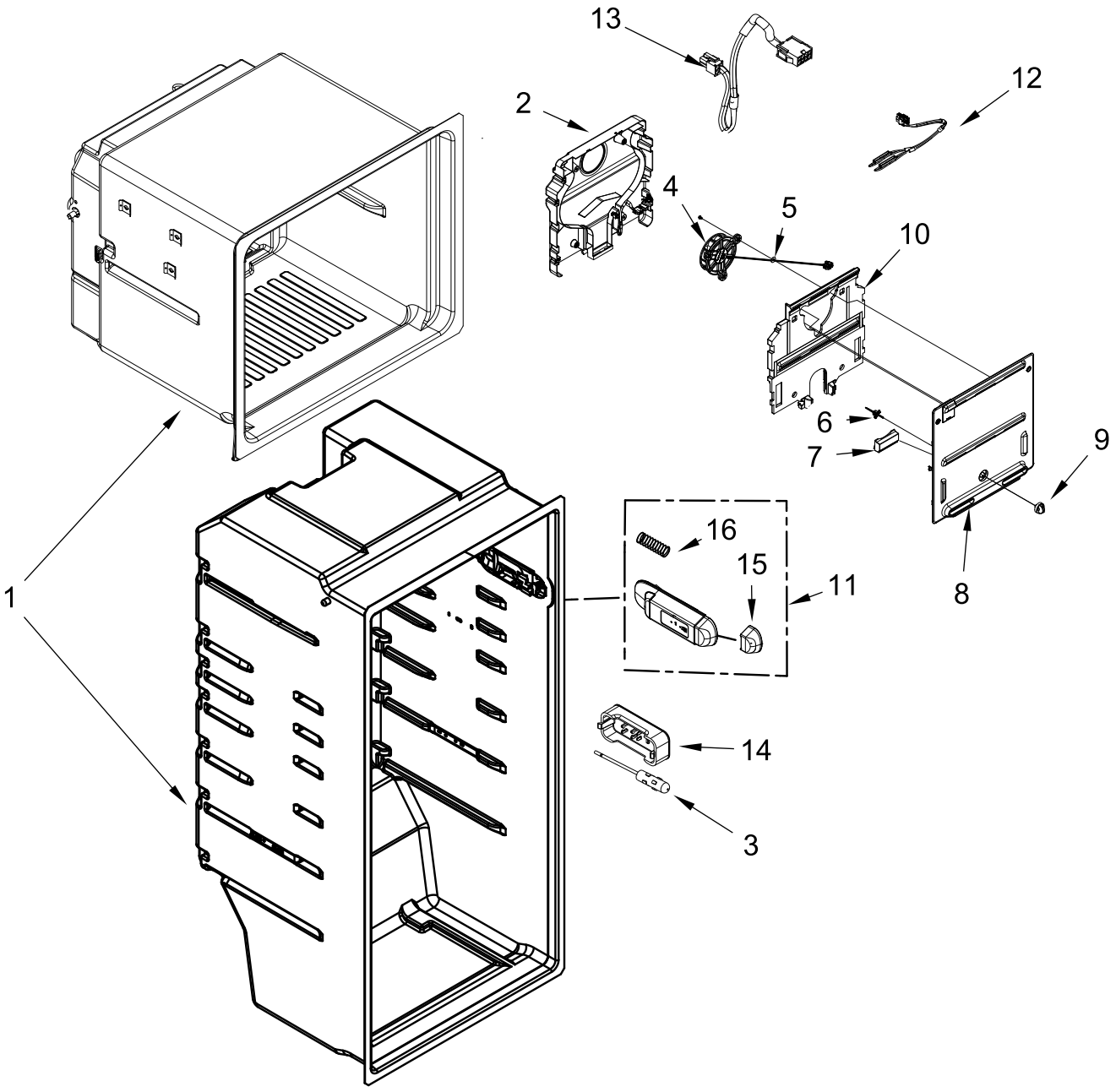

LINER PARTS

Illus. No.	Part No.	Description
1		Liner (Not Serviced)
2	W11235950	Cover Assembly, Back
3		Thermistor (Not Serviced)
4	W11117547	Assembly, Fan Motor
5	489468	Washer
6	W11262026	Control, Damper
7	W11236030	Wedge, Front
8	W11288284	Cover, Evaporator Front
9	W11249471	Knob, Control
10	W11179121	Front, Assembly
11	W11390538	Assembly, Electronic Control
12	W11466252	Wire Assemby (Includes Thermal Fuse)
13	W11235113	Wire Assembly, Ice Maker
14	W10425252	Cover, Thermistor
15	W11254962	Button
16	W10520965	Spring

SHELF PARTS

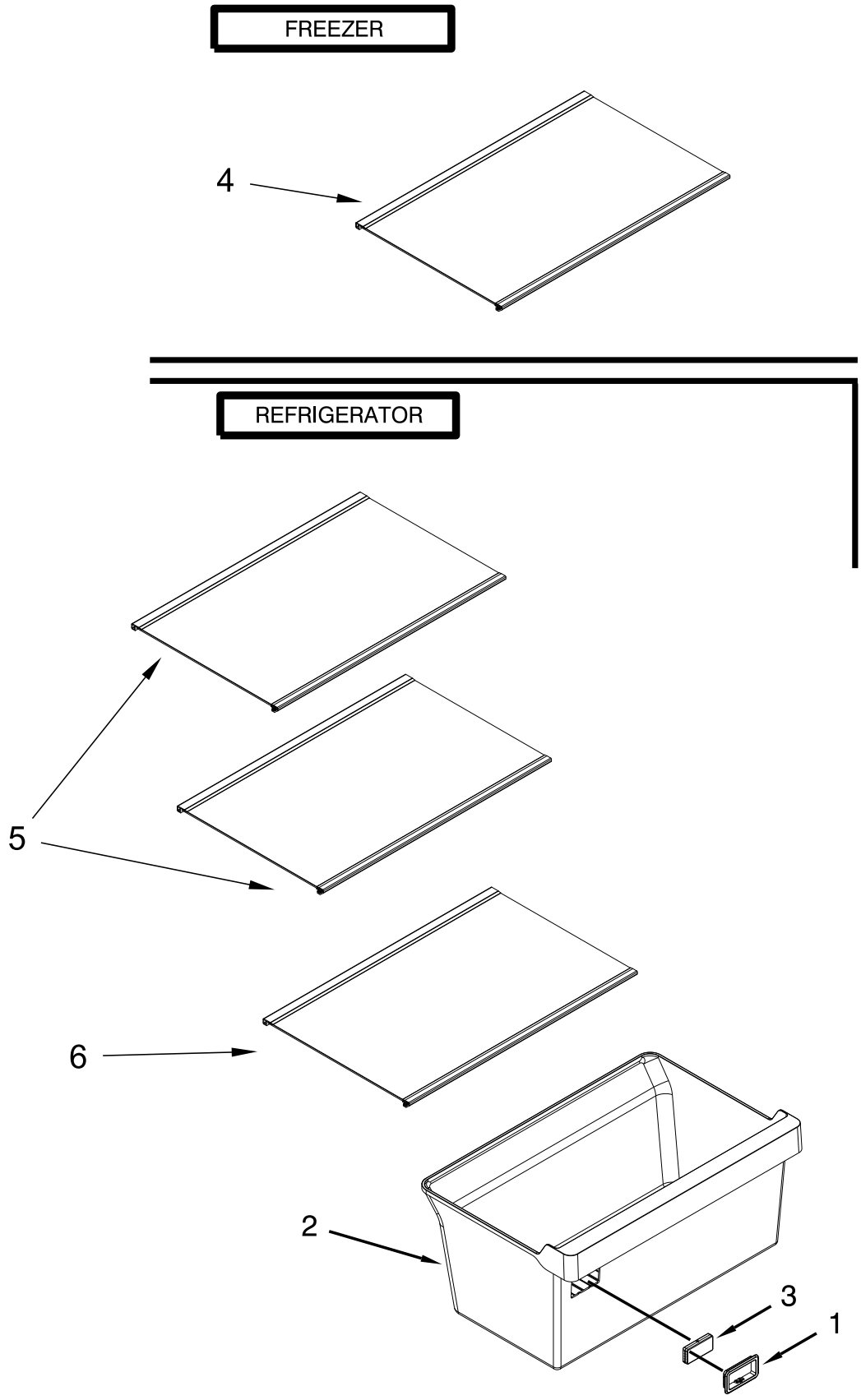

SHELF PARTS

Illus. No.	Part No.	Description
1	W10435530	Frame, Humidity Control
2	W11295868	Assembly, Crisper
3	W10431229	Control, Humidity
4	W11248340	Shelf, Glass
5	W11248335	Shelf, Glass
6	W11367385	Shelf, Bottom Glass

DOOR PARTS

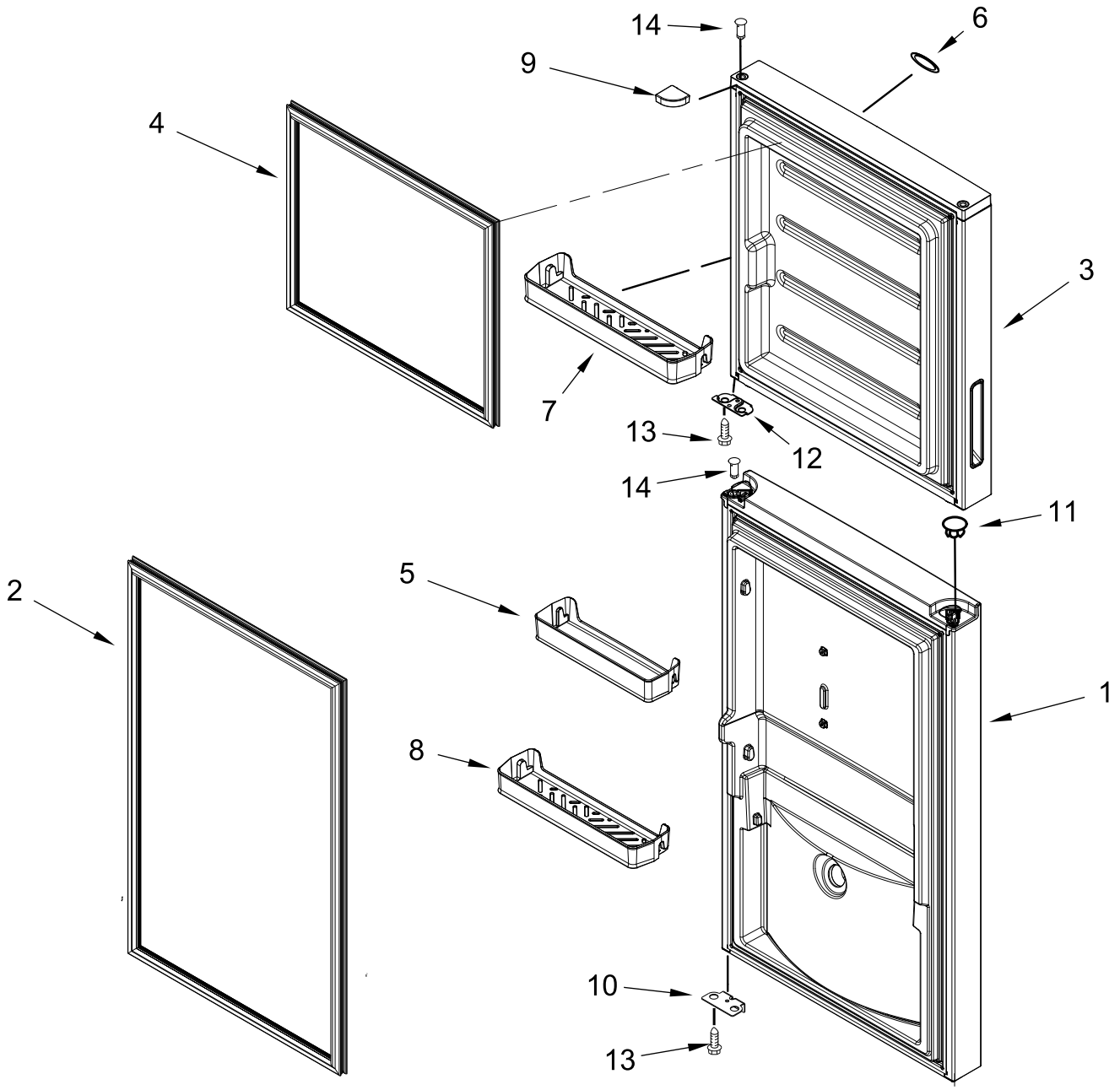

DOOR PARTS

Illus. No.	Part No.	Description
1	W11309091	Refrigerator Door Assembly (White)
2	W11235133	Gasket, Refrigerator Door (White)
3	W11309075	Freezer Door Assembly (White)
4	W11235127	Gasket, Freezer Door (White)
5	W11291426	Bin, Bottle
6	W10884775	Badge
7	W11247924	Door Bin, Freezer
8	W11247889	Door Bin, Refrigerator
9	W11246845	Cover Endcap (White, Left Hand)
	W11246852	Cover Endcap (White, Right Hand)
10	2189202	Bracket, Door Stop
11	W11255553	Plug, Hole (Grey)
12	W10397055	Bracket, Door Stop
13	489442	Screw
14	W10492018	Thimble, Top (White)

UNIT PARTS

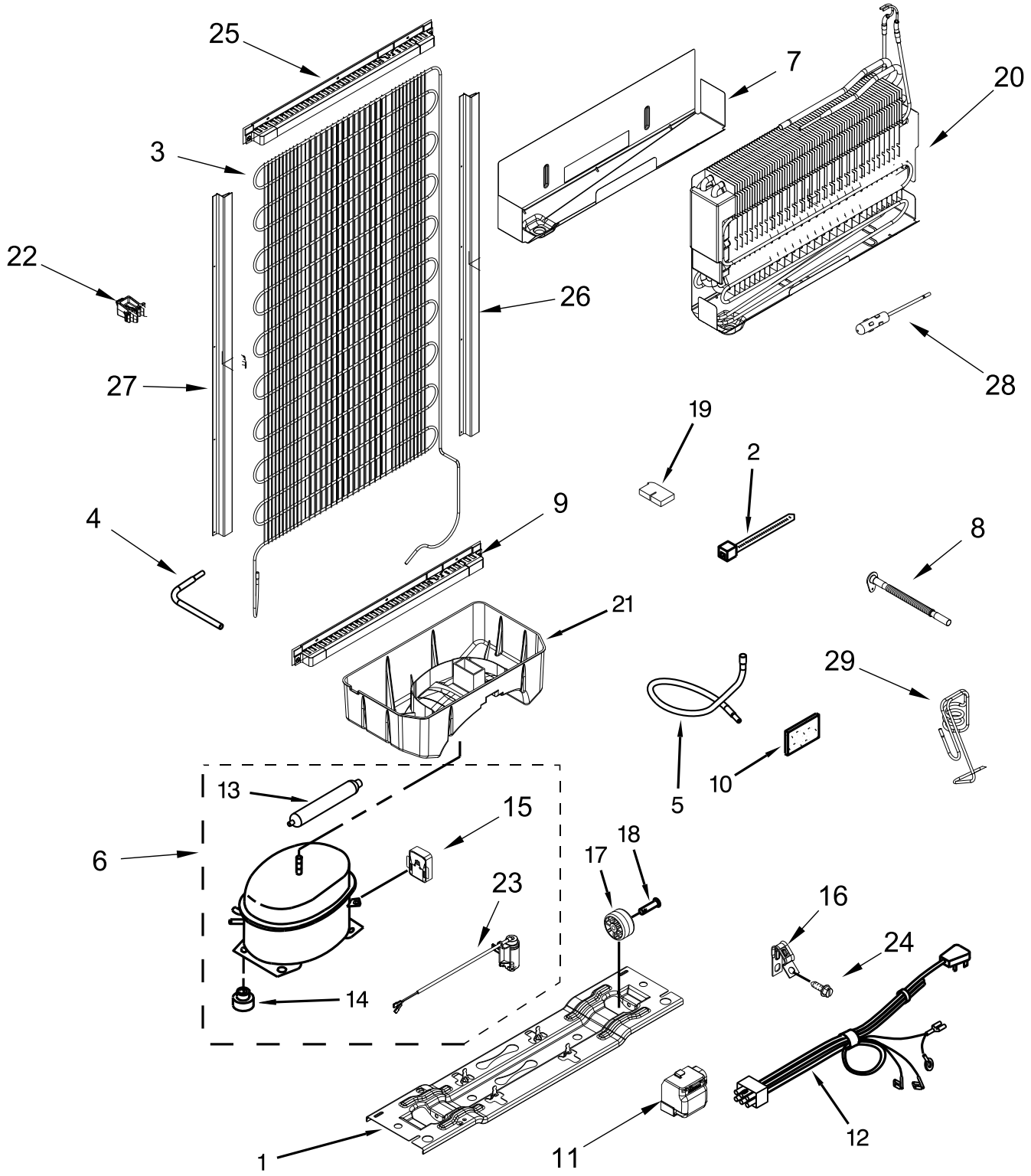

UNIT PARTS

Illus. No.	Part No.	Description
1	W10378704	Plate, Compressor Support
2	2263990	Tie, Wire
3	W11246374	Condenser
4	2174739	Tube, Process
5	W11383830	Suction Tube, Static
6	W11826077	Compressor
7	W11795437	Heat Shield
8	W11488945	Extension, Drain Tube
9	W11264207	Condenser, Bottom Protection
10	2215468	Sound Insulation
11	W11342284	Cover, Terminal Board
12	W11248029	Assembly, Power Cord
13	W10805035	Drier (Service Drier Without Dye)
14	10835903	Grommet, Compressor
15	W11541371	Device, Start
16	W11242280	Clamp, Power Cord
17	W10475495	Roller, Cabinet
18	2179826	Axle, Rivet
19	W10261299	Wedge, Evaporator
20	W11514910	Evaporator Assembly
21	W11461578	Tray, Water
22	326020544	Support, Condenser
23	W11358319	Assembly, Capacitor
24	489442	Screw
25	W11264206	Condenser, Top Protection
26	W11377937	Condenser Side Protection (Left)
27	W11377938	Condenser Side Protection (Left)
28		Thermistor (Not Serviced)
29	W11255016	Coil, Discharge
		REFRIGERANT CHARGE
		40.8 Grams (R-600a)

OPTIONAL PARTS

PAINT, TOUCH-UP (1/2OZ.)

Illus. No.	Part No.	Description
	72017	Paint, Touch-up (White, 1/2 oz)
	72032	Paint, Touch-up (Black, 1/2 oz)
	W10134625	Paint, Touch-up (Apollo Grey, 1/2 oz.)

PAINT, PRESSURIZED SPRAY (12 OZ.)

Illus. No.	Part No.	Description
	350942	Paint, Spray (White Primer, 12 oz)
	350930	Paint, Spray (White, 12 oz)
	285006	Paint, Spray (Black, 12 oz)

PAINT, BULK (1 QT.)

Illus. No.	Part No.	Description
	799344	Paint, Bulk (White, Uncut 1 qt)

ICE MAKER FIELD INSTALLABLE

Illus. No.	Part No.	Description
	W11424126	Complete Icemaker Kit (Includes Icemaker, Bin & Shelf)
	W11416492	Icemaker Kit (Includes Fill Tube and Screws)
	W11403893	Pan, Ice
	W11403892	Shelf, Wire

TORX SCREW WRENCH

Illus. No.	Part No.	Description
	1117510	Torx Key