Multimedia Enhanced

Whirlpool®

SERVICE MANUAL

Whirlpool®, Maytag®, KitchenAid®, Kenmore®, JennAir®, IKEA®, and Amana® Ranges

W11174814B

FOREWORD

This Whirlpool Service Manual (Part No. W11174814B), provides the In-Home Service Professional with service information for the “Whripool®, Maytag®, KitchenAid®, Kenmore®, JennAir®, IKEA® and Amana® Ranges.”

The Wiring Diagram used in this Service Manual is typical and should be used for training purposes only. Always use the Wiring Diagram supplied with the product tech sheet when servicing the oven.

For specific operating and installation information on the model being serviced, refer to the “Use and Care Guide” or “Installation Instructions” provided with the oven.

GOALS AND OBJECTIVES

The goal of this Service Manual is to provide information that will enable the In-Home Service Professional to properly diagnose malfunctions and repair the “Whripool®, Maytag®, KitchenAid®, Kenmore®, JennAir®, IKEA® and Amana® Ranges.”

The objectives of this Service Manual are to:

- Understand and follow proper safety precautions.
- Successfully troubleshoot and diagnose malfunctions.
- Successfully perform necessary repairs.

WHIRLPOOL CORPORATION assumes no responsibility for any repairs made on our products by anyone other than authorized In-Home Service Professionals.

©2020 Whirlpool Corporation. Benton Harbor, MI 49022

TABLE OF CONTENTS

Whirlpool®, Maytag®, KitchenAid®, Kenmore®, JennAir®, IKEA® and Amana® Ranges

SECTION 1: GENERAL INFORMATION 1-01

RANGE SAFETY 1-02
PRODUCT SPECIFICATIONS 1-03
PRODUCT FEATURES 1-11
MODEL AND SERIAL NUMBER LOCATION 1-15
MODEL NOMENCLATURE 1-16
TECH SHEET LOCATION 1-20

SECTION 2: DIAGNOSTICS 2-01

SAFETY 2-02
DIAGNOSTICS MODE 2-03
FAILURE/ERROR DISPLAY CODES (ALL MAXWELL/MRC CONTROL DISPLAYS) 2-07
FAILURE/ERROR DISPLAY CODES (ALL LCC/LCX CONTROL DISPLAYS) 2-09
FAILURE/ERROR DISPLAY CODES (ALL INDIGO CONTROL) 2-13

SECTION 3: COMPONENT TESTING 3-01

SAFETY 3-02
WIRING DIAGRAM 3-03
COMPONENT TESTING 3-33
COMPONENT LOCATION 3-47

SECTION 4: COMPONENT ACCESS 4-01

REMOVING THE CONSOLE - FRONT CONTROL MODELS 4-02
REMOVING THE CERAN ELEMENT - FRONT CONTROL MODELS 4-04
REMOVING THE INDUCTION MODULE - FRONT CONTROL MODELS 4-05
REMOVING THE ACU/HMI MODULE - FRONT CONTROL MODELS 4-06
REMOVING THE INFINITE SWITCHES/BURNER CONTROLS - FRONT CONTROL MODELS 4-07
REMOVING THE COOKTOP - REAR CONTROL MODELS 4-08
REMOVING THE CERAN ELEMENT - REAR CONTROL MODELS 4-09
REMOVING THE INDUCTION MODULE - REAR CONTROL MODELS 4-10
REMOVING THE ACU/HMI MODULE - REAR CONTROL MODELS 4-11
REMOVING THE INFINITE SWITCHES/BURNER CONTROLS - REAR CONTROL MODELS 4-12
ACCESSING THE OVEN COMPONENTS (ELECTRIC) 4-13
ACCESSING THE OVEN COMPONENTS (GAS) 4-14

Notes

Section 1: General Information

This section provides general safety, parts, and information for the “Whirlpool®, Maytag®, KitchenAid®, Kenmore®, JennAir®, IKEA®, and Amana® Ranges.”

- Range Safety
- Product Specifications
- Product Feature
  - Control Panel
  - Connected Policy
- Model and Serial Number Label
  - Location
  - Model Nomenclature
- Tech Sheet Location

Range Safety

Your safety and the safety of others are very important.

We have provided many important safety messages in this manual and on your appliance. Always read and obey all safety messages.

This is the safety alert symbol.

This symbol alerts you to potential hazards that can kill or hurt you and others.

All safety messages will follow the safety alert symbol and either the word “DANGER” or “WARNING.” These words mean:

⚠DANGER — **You can be killed or seriously injured if you don't immediately follow instructions.**

⚠WARNING — **You can be killed or seriously injured if you don't follow instructions.**

All safety messages will tell you what the potential hazard is, tell you how to reduce the chance of injury, and tell you what can happen if the instructions are not followed.

Product Specifications

KitchenAid® Electric/Gas Range

Dimensions	
Capacity (Cu. Ft.)	5.8 or 6.4 or 7.1
Depth Closed Excluding Handles (IN, inches)	$25^5/_{16}$ or $26^3/_8$
Depth Closed Including Handles (IN, inches)	$27^3/_4$ or $28^7/_8$
Depth With Door Open 90 Degree (IN, inches)	$47^7/_8$ or $48^3/_4$
Depth (IN, inches)	$27^3/_4$
Height (IN, inches)	36 or $47^1/_8$
Width (IN, inches)	$29^7/_8$
Description	
Fuel Type	Electric or Gas or Duel Fuel
Range Type	Freestanding or Slide-in
Size (IN, inches)	30
Exterior	
Door Removable	Yes
Door Type	Metal and Glass
Drawer Type	Storage/Warming/Baking Drawer or Access panel
Handle Color	Stainless steel
Handle Material	Metal
Handle Type	Towel Bar
Oven Window	Large
Controls	
Display Color	Red/White
Electronic Display Type	Digital
Knob Color	Stainless or Black
Knob Type	Metal
Features	
Automatic Convection Conversion Temperature Adjust	Yes
Heating Element On Indicator Light	Yes
Griddle	Included
LP Convertible	Yes
Hot Surface Indicator Light	Yes
Power On Indicator Light	Yes
Selection	Baking Drawer, Bake, Keep Warm, Clock, Cook Time Indicator, Delay Start, Keep Warm Setting, Proofing, Sabbath Mode, Steam Bake, Warm Zone
Details	
Automatic Shut-Off	Yes
Interior Color	Grey
Oven Control Knob Color	Black
Oven Control Location	Back guard
Oven Control Type	Electronic Touch
Oven Cooking System	Convection
Bake Element Power	3600 W or 4000 W or 18,000 B.T.U.
Hidden Bake Element	Yes

Broiler Element Power	3600 W or 4000 W or 11,000 B.T.U. or 13,000 B.T.U.
Broiler Location	Top of Oven
Convection Element Power	900 or 3200
Convection Functions	Bake, Broil, Roast
Convection Element Type	Fan
Number of oven lights	1 or 2
Oven Light Type	Incandescent
Oven Interior Depth (IN, inches)	$20^5/_8$ or $20^1/_8$ or $20^3/_4$
Oven Interior Height (IN, inches)	$22^1/_8$ or 20 or $22^1/_8$
Oven Interior Width (IN, inches)	$24^1/_8$ or $25^5/_{16}$
Number of Oven Racks	3
Number of Rack Guides	7
Oven Rack Type	1 Max Capacity, 1 Gliding Roll-out, 1 Steam Rack, 2 Standard
Oven Self-Cleaning	AquaLift® Self Clean
Cooktop Details	
Cooktop Control Knob Color	Black/Stainless Steel
Cooktop Control Location	Back guard/Front
Cooktop Control Type	Knobs
Cooktop Element Style	Radiant/Gas burner/Induction
Cooktop Surface Color	Black/Stainless steel/Color Coordinated
Cooktop Surface Material	Ceramic Glass/Porcelain coated steel/Stainless steel
Ignition Type	Electronic
Number of Cooking Element-Burners	4 or 5
Center Rear Element-Burner Power	100 W or 8000 B.T.U.
Center Rear Element-Burner Size	6"
Center Rear Element-Burner Type	Warming/Sealed burner
Left Front Element-Burner Power	1400 W/1900 W/2950 W/3000 W/4500 W or 18,000 B.T.U.
Left Front Element-Burner Size	7" Bridge or 9"/6" or 12"
Left Front Element-Burner Type	Dual/Triple/Sealed burner/Induction bridge
Left Rear Element-Burner Power	1300 W/2500 W or 5000 B.T.U./9500 B.T.U.
Left Rear Element-Burner Size	6" or 7" Bridge
Left Rear Element-Burner Type	Radiant/Hyper/Sealed Burner/Induction Bridge
Right Front Element-Burner Power	1400 W/3000 W/3200 W or 15,000 B.T.U.
Right Front Element-Burner Size	9"/6"/10"
Right Front Element-Burner Type	Dual/Hyper/Sealed Burner/Radiant/Induction Single
Right Rear Element-Burner Power	1200 W/1800 W/3600 W or 5000 B.T.U./9200 B.T.U.
Right Rear Element-Burner Size	6" or 11"
Right Rear Element-Burner Type	Single/Sealed Burner/Radiant/Induction Single
Grate Details	Cast Iron Grates,Continuous,Dishwasher Safe,Matte Finish
Number of Grates	2 or 3
Electrical	
Amps	15 or 40
Hz	60
Volts	240
Power Cord Included	Yes

Whirlpool® Electric/Gas Range

Dimensions	
Capacity (Cu. Ft.)	5.8 or 6.4
Cutout Depth (IN, inches)	24
Cutout Height (IN, inches)	36
Cutout Width (IN, inches)	30
Depth Closed Excluding Handles (IN, inches)	$25^{5}/_{16}$ or $27^{7}/_{8}$
Depth Closed Including Handles (IN, inches)	$27^{3}/_{8}$ or $28^{7}/_{8}$
Depth With Door Open 90 Degree (IN, inches)	$47^{13}/_{16}$ or $47^{15}/_{16}$ or $47^{7}/_{8}$
Depth (IN, inches)	$27^{3}/_{4}$
Height (IN, inches)	36 or $47^{7}/_{8}$
Maximum Height (IN, inches)	$47^{7}/_{8}$
Minimum Height (IN, inches)	$46^{7}/_{8}$
Width (IN, inches)	$29^{7}/_{8}$
Description	
Fuel Type	Electric or Gas
Range Type	Freestanding or Slide-in
Size (IN, inches)	30
Exterior	
Door Removable	Yes
Door Type	Glass Window or Metal and Glass
Drawer Type	Storage Drawer
Handle Color	Black or White or Stainless Steel
Handle Material	Plastic or Metal or Stainless Steel
Handle Type	Towel Bar or Reach Through Handle
Oven Window	Large or Extra large
Controls	
Display Color	Blue or White
Electronic Display Type	LED/VFD
Knob Color	Color Coordinated/Black/White/Stainless
Knob Type	Dishwasher-Safe Weighted or Weighted-Plastic
Features	
LP Convertible	Yes - Kit Included
Natural Gas Convertible	Yes
Automatic Convection Conversion Temperature Adjust	Yes
Griddle	NA
Heating Element On Indicator Light	Yes
Hot Surface Indicator Light	Yes
Power On Indicator Light	Yes
Selection	Audible Signal, Broil, Cancel/Off, Clock, Control Lock, Convect Modes, Cook Time Indicator, Delay Start, Frozen Bake, Keep Warm Setting, Language Conversion, Proofing, Rapid Preheat, Start Time, Stop Time
Details	
Automatic Shut-Off	NA or Yes
Interior Color	Grey
Oven Control Knob Type	Plastic

Oven Control Location	Front/Backguard
Oven Control Type	Electronic Touch
Oven Control Knob Color	Black/White
Oven Cooking System	Convection
Bake Element Power	3600 W or 18,000 BTU
Hidden Bake Element	Yes
Broiler Element Power	3600 W or 4000 W or 10,000 BTU
Broiler Location	Top of Oven
Convection Element Power (Watts)	900 or 925
Convection Element Type	Fan
Convection Functions	Bake, Broil, Roast
Number of Oven Lights	1
Oven Light Switch Location	Oven Control
Oven Light Type	Halogen/Incandescent
Oven Interior Depth (IN, inches)	$20^{3}/_{4}$ or $20^{5}/_{8}$
Oven Interior Height (IN, inches)	20 or $21^{3}/_{8}$ or $22^{1}/_{8}$
Oven Interior Width (IN, inches)	$24^{3}/_{8}$ or $24^{1}/_{8}$
Number of Oven Racks	2 or 3
Number of Rack Guides	7
Oven Rack Type	1 Max Capacity, 2 Standard
Oven Self-Cleaning	AquaLift® Self Clean
Cooktop Details	
Cooktop Control Knob Color	Black/White/Silver/Chrome/Stainless Steel
Cooktop Control Knob Type	Weighted-Plastic
Cooktop Control Location	Front or Backguard
Cooktop Control Type	Knobs
Cooktop Element Style	Smoothtop/Radiant/Sealed Burner/Gas Burner
Cooktop Surface Color	Black on Stainless or Black
Cooktop Surface Material	Ceramic Glass/Porcelain Coated Steel
Ignition Type	Electronic or Direct Spark Ignition
Number of Cooking Element-Burners	5
Center Rear Element-Burner Power	100 W or 8000 B.T.U.
Center Rear Element-Burner Size	6"
Center Rear Element-Burner Type	Radiant/Warming/Multi Purpose/Oval Burner
Left Front Element-Burner Power	2500 W or 3000 W or 17,000 B.T.U.
Left Front Element-Burner Size	12"/9"/6"
Left Front Element-Burner Type	Radiant/Dual/Multi Purpose/High Output/Triple
Left Rear Element-Burner Power	300 W/700 W/1300 W or 15,000 B.T.U. or 9500 B.T.U.
Left Rear Element-Burner Size	6"
Left Rear Element-Burner Type	Radiant Melt/Single/Multi Purpose/Burner
Right Front Element-Burner Power	2500 W or 3000 W or 15,000 B.T.U.
Right Front Element-Burner Size	10"/9"/6"
Right Front Element-Burner Power	1200 W or 5000 B.T.U.
Right Rear Element-Burner Size	6"
Right Rear Element-Burner Type	Radiant/Single/Simmer
Grate Details	Cast Iron Grates or Porcelain Coated Cast Grates

Number of Grates	2
Grate Details	Cast Iron Grates Dishwasher, Safe Locking Full Width Cast Iron, Matte Finish Continuous with, Hinge Porcelain Coated Cast Grates
Electrical	
Amps	15 or 40
Hz	60
Volts	120 or 240
Power Cord Included	Yes

Maytag® Electric/Gas Range

Dimensions	
Capacity (Cu. Ft.)	5.8 or 6.4
Cutout Height (IN, inches)	36
Cutout Width (IN, inches)	30
Depth Closed Excluding Handles (IN, inches)	$25^{5}/_{16}$
Depth With Door Open 90 Degree (IN, inches)	$47^{13}/_{16}$
Depth (IN, inches)	$27^{3}/_{4}$ or $28^{7}/_{8}$
Height (IN, inches)	36 or $47^{7}/_{8}$
Width (IN, inches)	$29^{7}/_{8}$
Description	
Fuel Type	Electric or Gas
Range Type	Freestanding or Slide-in
Size (IN, inches)	30
Exterior	
Door Removable	Yes
Door Type	Glass Window or Metal and Glass
Drawer Type	Stainless Steel/Storage Drawer/Warming Drawer
Handle Color	Black or White or Stainless Steel
Handle Material	Plastic or Metal or Stainless Steel
Handle Type	Reach Through Handle
Oven Window	Extra large
Controls	
Display Color	Amber
Electronic Display Type	Digital
Knob Color	Stainless Steel
Knob Type	Weighted-Plastic
Features	
Automatic Convection Conversion Temperature Adjust	Yes
Griddle	Included
LP Convertible	Yes - Kit Included
Power On Indicator Light	Yes
Power Outage Compatible	Yes - Cooktop Only
Selection	Audible Signal,Control Lock,Cook Time Indicator, Delay Start, Power Preheat, Sabbath Mode, Warm Hold

Details	
Interior Color	Grey
Oven Control Knob Color	Black
Oven Control Location	Front/Backguard
Oven Control Type	Electronic Touch
Oven Cooking System	Convection
Oven Ignition Type	Spark
Bake Element Power	3600 W or 18,000 B.T.U.
Hidden Bake Element	Yes
Broiler Element Power	4000 W or 11,000 B.T.U.
Broiler Location	Top of Oven
Convection Element Power (Watts)	900
Convection Element Type	Fan
Convection Functions	Bake, Broil, Roast, Convection Conversion
Number of Oven Lights	1
Oven Light Switch Location	Top of Console/Oven Control
Oven Light Type	Incandescent
Oven Interior Depth (IN, inches)	$20^{3}/_{4}$ or $20^{5}/_{8}$
Oven Interior Height (IN, inches)	20 or $21^{3}/_{8}$ or $22^{1}/_{8}$
Oven Interior Width (IN, inches)	$24^{3}/_{8}$ or $24^{1}/_{8}$
Number of Oven Racks	3
Number of Rack Guides	7
Oven Rack Type	1 Max Capacity, 2 Standard
Oven Self-Cleaning	AquaLift® Self Clean
Cooktop Details	
Cooktop Control Knob Color	Stainless Steel
Cooktop Control Knob Type	Weighted-Plastic
Cooktop Control Location	Front or Backguard
Cooktop Control Type	Knobs
Cooktop Element Style	Smoothtop/Radiant/Gas Burner
Cooktop Surface Color	Black on Stainless or Black
Cooktop Surface Material	Glass/Porcelain Coated Steel
Ignition Type	Direct Spark Ignition
Number of Cooking Element-Burners	4 or 5
Center Rear Element-Burner Power	100 W or 8000 B.T.U.
Center Rear Element-Burner Size	6"
Center Rear Element-Burner Type	Warming/Oval Burner
Left Front Element-Burner Power	2500 W or 3000 W or 1400 W or 18,000 B.T.U.
Left Front Element-Burner Size	12"/9"/6"
Left Front Element-Burner Type	Dual/High Output/Burner
Left Rear Element-Burner Power	700 W/1200 W or 5000 B.T.U. or 9500 B.T.U.
Left Rear Element-Burner Size	6"
Left Rear Element-Burner Type	Radiant/Multi Purpose/Burner
Right Front Element-Burner Power	3200 W or 15,000 B.T.U.
Right Front Element-Burner Size	10"
Right Front Element-Burner Type	Radiant/High output/Hyper/Burner

Right Rear Element-Burner Power	1200 W or 5000 B.T.U.
Right Rear Element-Burner Size	6"
Right Rear Element-Burner Type	Radiant/Simmer
Grate Details	Cast Iron Grates or Porcelain Coated Cast Grates
Number of Grates	2
Grate Details	Cast Iron Grates, Dishwasher Safe, Matte Finish, Porcelain Coated Cast Grates
Electrical	
Amps	15 or 40
Hz	60
Volts	120 or 240
Power Cord Included	Yes

JennAir® Electric/Gas/Induction Range

Dimensions	
Capacity (Cu. Ft.)	5.8 or 6.4 or 7.1
Depth Closed Excluding Handles (IN, inches)	$28^{7}/_{8}$
Depth (IN, inches)	$25^{5}/_{16}$ or $28^{5}/_{16}$
Height (IN, inches)	36
Width (IN, inches)	$29^{7}/_{8}$
Description	
Fuel Type	Electric Radiant/Induction/Gas/Dual Fuel
Range Type	Downdraft/Slide-in
Size (IN, inches)	30
Exterior	
Door Removable	Yes
Door Type	Metal and Glass
Drawer Type	Baking Drawer/Access Panel
Handle Color	Stainless Steel
Handle Material	Metal
Handle Type	Towel Bar
Oven Window	Extra large
Controls	
Display Color	Red/White
Electronic Display Type	Digital
Knob Color	Stainless Steel/Metal
Knob Type	Metal
Features	
Automatic Convection Conversion Temperature Adjust	Yes
Heating element on indicator light	Yes
Hot surface indicator light	Yes
Power On Indicator Light	Yes
Selection	Sabbath Mode
Details	
Interior Color	Grey
Oven Control Knob Color	NA
Oven Control Location	Front

Oven Control Type	Electronic Touch
Oven Cooking System	Convection
Bake Element Power	3600 W or 18,000 B.T.U.
Hidden Bake Element	Yes
Broiler Element Power	4000 W or 13,000 BTU
Broiler Location	Top of Oven
Convection Element Power (Watts)	900 or 3200
Convection Element Type	Fan
Convection Functions	Bake, Broil, Roast
Number of Oven Lights	2 or 3
Oven Light Switch Location	Oven Control
Oven Light Type	Incandescent
Number of Oven Racks	3
Number of Rack Guides	7
Oven Rack Type	Max Capacity, Gliding Roll-Out, and Heavy Duty
Oven Self-Cleaning	AquaLift® Self Clean
Cooktop Details	
Cooktop Control Knob Color	Stainless Steel/Silver/Chrome
Cooktop Control Knob Type	Metal
Cooktop Control Location	Front or Top Center
Cooktop Control Type	Knobs
Cooktop Element Style	Radiant/Gas burner/Induction
Cooktop Surface Color	Stainless or Black
Cooktop Surface Material	Ceramic Glass/Stainless Steel
Number of Cooking Element-Burners	4 or 5
Center Front Element-Burner Power	100 W or 8000 B.T.U.
Center Front Element-Burner Size	6"
Center Front Element-Burner Type	Radiant Warm/Oval burner
Left Front Element-Burner Power	2500 W or 3000 W or 3200 W or 19,000 B.T.U.
Left Front Element-Burner Size	12"/9"/7"/6"
Left Front Element-Burner Type	Dual/Triple/Burner/Induction bridge
Left Rear Element-Burner Power	1300 W
Left Rear Element-Burner Size	6"
Left Rear Element-Burner Type	Radiant Hyper/Induction bridge
Right Front Element-Burner Power	3200 W or 3600 W or 15,000 B.T.U.
Right Front Element-Burner Size	10"
Right Front Element-Burner Type	Radiant Hyper/Burner/Induction single
Right Rear Element-Burner Power	1200 W or 1800 W or 9200 B.T.U.
Right Rear Element-Burner Size	6"
Right Rear Element-Burner Type	Radiant/Burner/Induction single
Grate Details	Cast Iron, Grates Continuous Dishwasher Safe, Matte Finish
Number of Grates	3
Electrical	
Amps	15 or 40
Volts	240

Product Features

CONTROL PANEL

Whirlpool® Electric Range

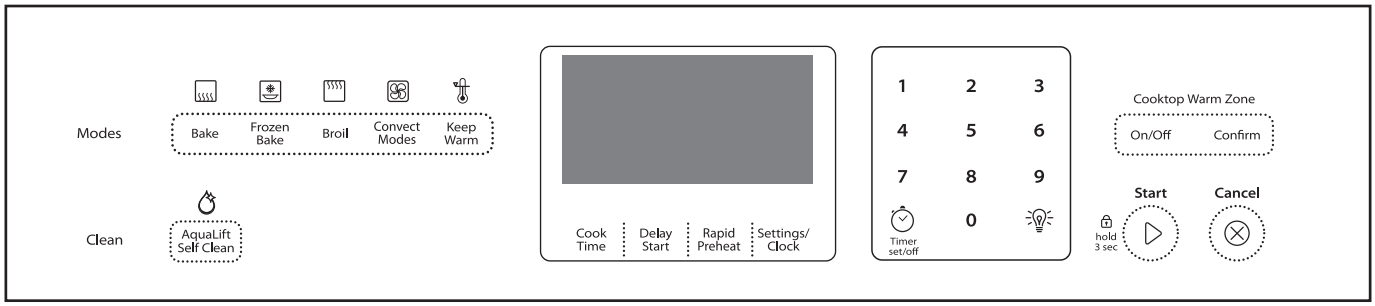

Whirlpool® Gas Range

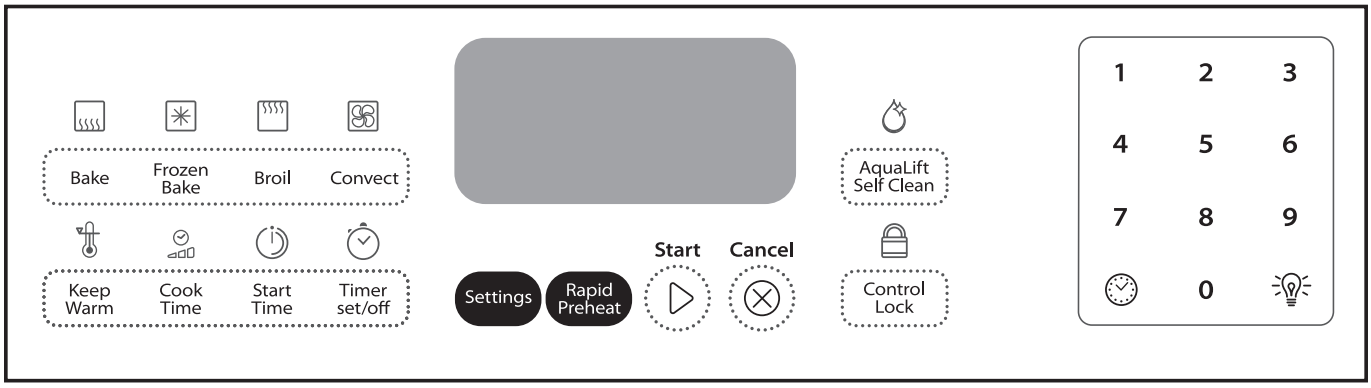

Whirlpool® Electric/Gas Range (Indigo Control Panel)

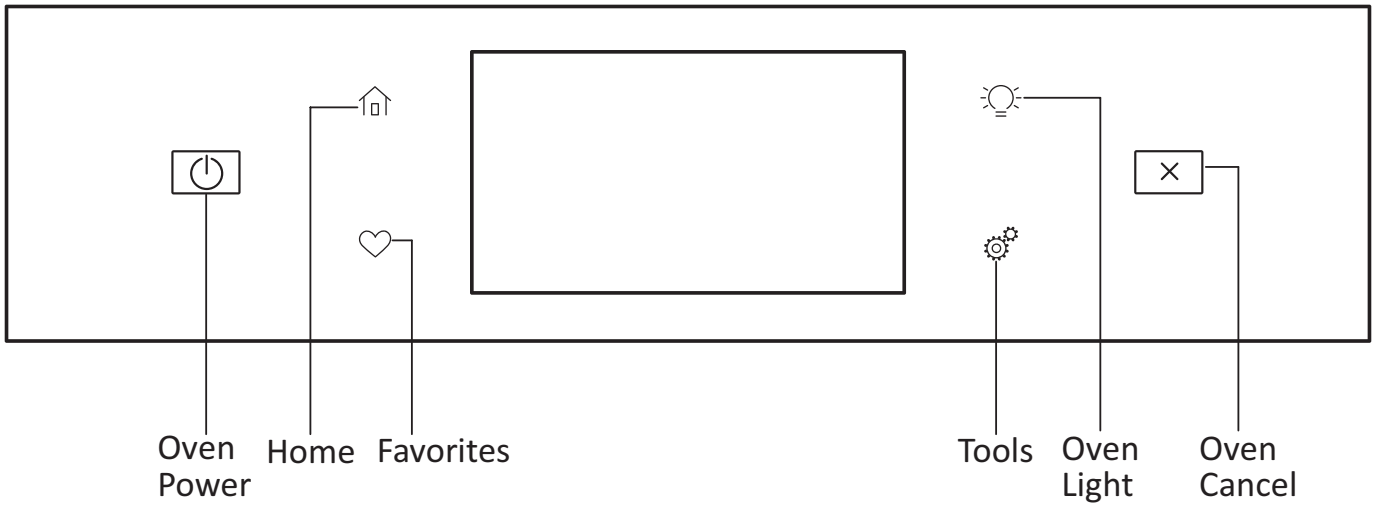

Maytag® Electric Range

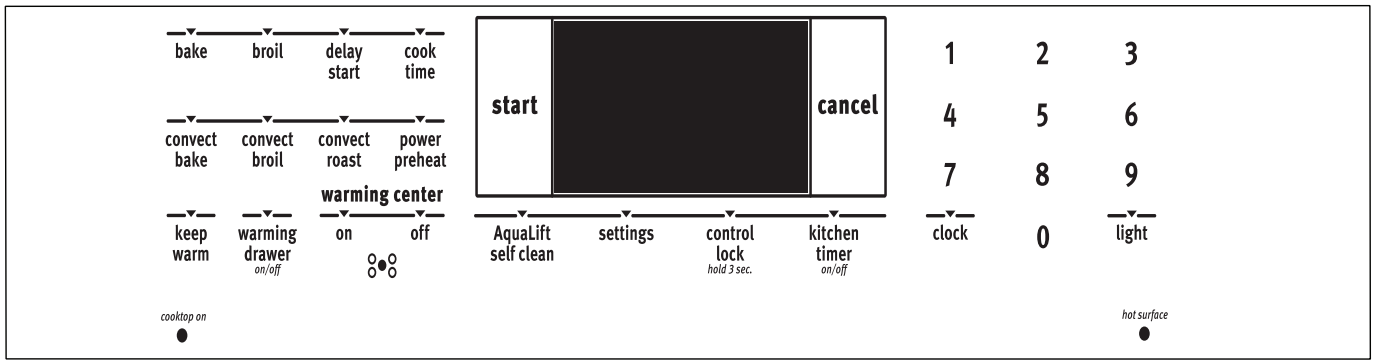

Maytag® Gas Range

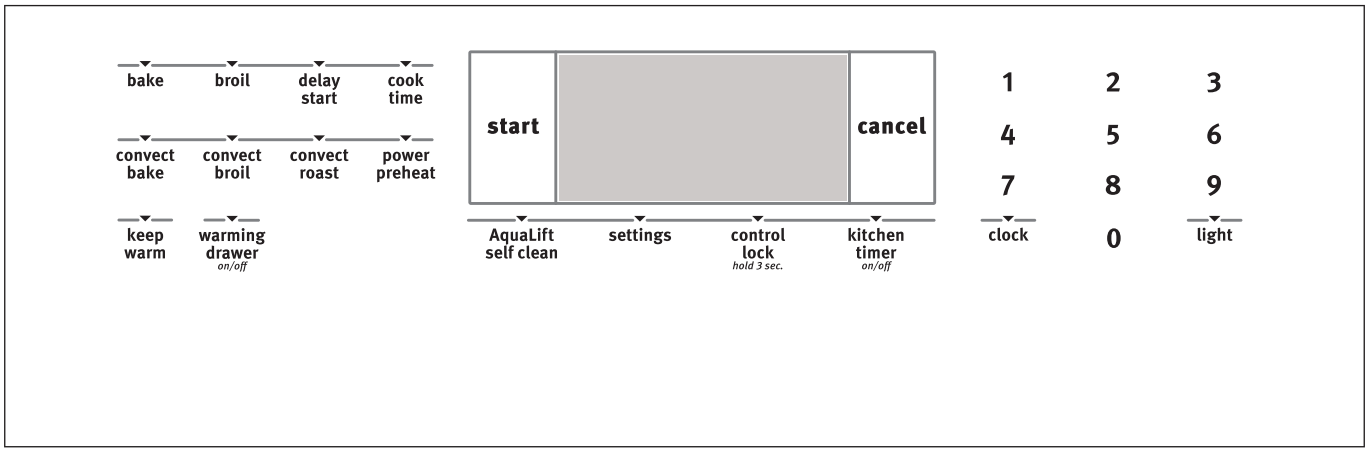

KitchenAid® Electric and Gas Range

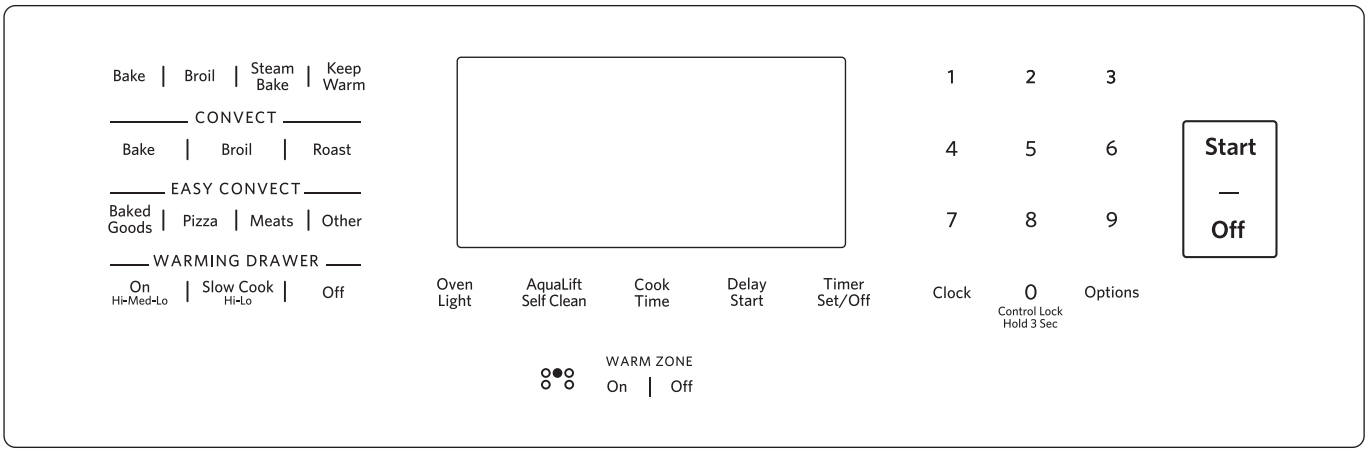

KitchenAid® Electric Induction/Duel Fuel/Downdraft/Duel Fuel Downdraft Range

Kenmore® Electric/Downdraft/Duel Fuel Downdraft Range

Kenmore® Gas Range

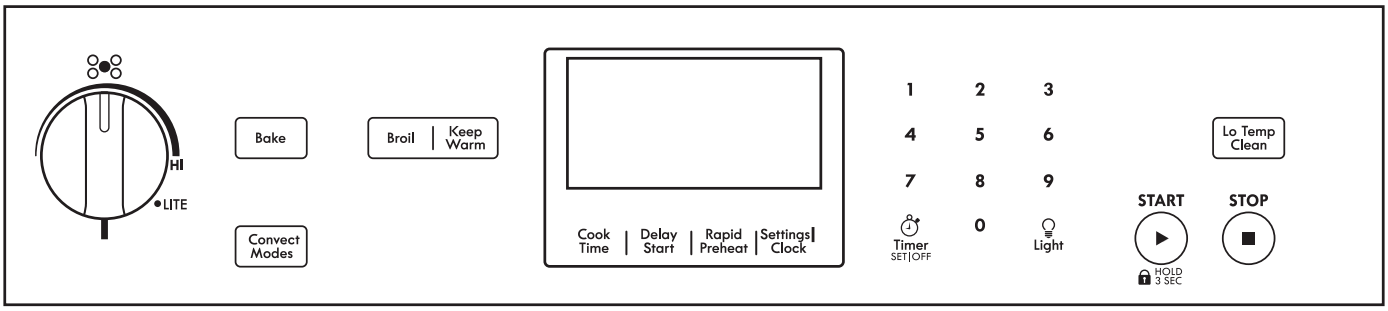

JennAir® Electric/Gas/Electric Induction/Duel Fuel/Duel Fuel Downdraft Range

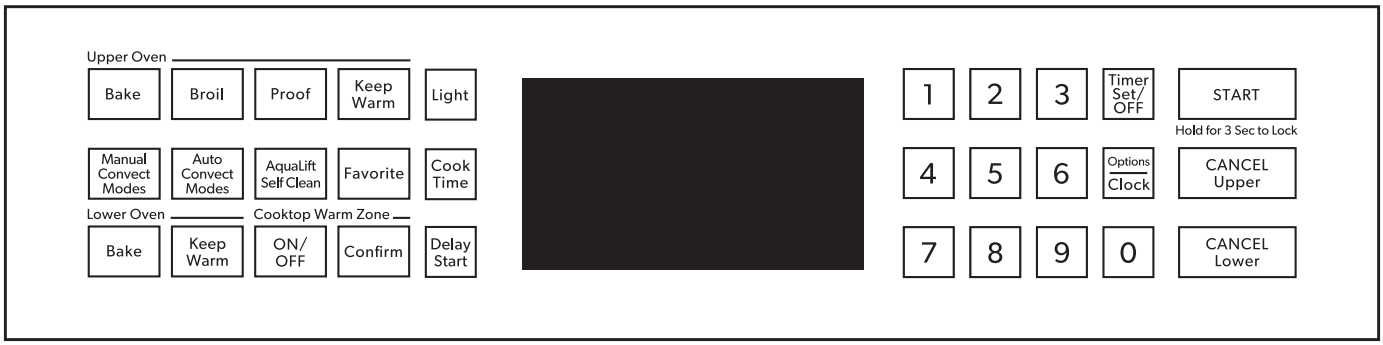

CONNECTED POLICY

Whirlpool Service Policy: If service performed on the appliance interrupts the appliance connection to the home WiFi network or to the Internet, the service technician should reprovision (reconnect) the appliance after service is complete. NOTE: Due to privacy/security issues, if in the provisioning process the customer password is required, the service technician is encouraged to hand the mobile device back to the customer for entry of that password. Visit www.whirlpool.com/connect for more connectivity information.

Connected Smart Appliances, Servicing WiFi Controls

IMPORTANT: If replacing multiple controls together on a WiFi connected smart appliance, each control must be replaced **"one at a time and then powered up before the next control is replaced."** This is to allow the model and serial number to be published to the other control.

After service is completed:

1. Apply the supplied NEW SAID label to the product over the existing SAID label.
2. Document the new SAID for the customer (for their records).
3. Plug in appliance or reconnect power.
4. When the WiFi module is replaced, the appliance has received a new unique ID which is stored within the WiFi hardware. The supplied NEW SAID label provides the customer with this appliance's NEW unique identification.
5. Per the current Service Policy, if service performed on the appliance interrupts the appliance connection to the home WiFi network or to the Internet, the service technician should reprovision (reconnect) the appliance after service is complete.
   NOTE: Due to privacy/security issues, if in the provisioning process the customer password is required, the service technician is encouraged to hand the mobile device back to the customer for entry of that password.
6. Complete these steps by either using "Scan to Connect" (newer units) or following the instructions provided in the Connected Smart Appliance Service Manual (**W10785366A**).
7. After adding a NEW appliance to their account, delete the original appliance associated with their account.
8. If you have any problems or questions, call the Techline for assistance.

Get the App and Get Connected

With your mobile device, get the app, connectivity setup instructions, terms of use, and privacy policy at:www.whirlpool.com/connect. In Canada, visit www.whirlpool.ca/en_CA and click on the Whirlpool® Connected Appliances link.

IMPORTANT: Proper installation of your appliance prior to use is your responsibility. Be sure to read and follow the Installation Instructions that came with your appliance. Connectivity requires Wi-Fi and account creation. App features and functionality subject to change. Data rates may apply. If you have any problems or questions, call Whirlpool Corporation Connected Appliances at **1-866-333-4591**.

You Will Need:

- A home wireless router supporting Wi-Fi, preferably 2.4 GHz with WPA2 security. If you are unsure of your router's capabilities, refer to the router manufacturer's instructions.
- The router to be on and have a live internet connection.
- The 10-character SAID code for your appliance. The SAID code is either printed on a label on the appliance or can be found on the LCD screen. Refer to the appliance User Guide for the location.

Once installed, launch the app. You will be guided through the steps to set up a user account and to connect your appliance. If you have any problems or questions, call Whirlpool Corporation Connected Appliances at **1-866-333-4591**.

Model and Serial Number Location

Model and Serial Number Label Location (behind oven door, under console)

Model Nomenclature

Whirlpool® Model Nomenclature

MODEL NUMBER	W	F	E	7	7	0	H	0	F

Brand
W = Whirlpool

Platform
F = Freestanding Range
G = Double Oven Range
E = Slide-In Range
L = Double Oven Slide-In Range
X = Drop-In Range

Sub Platform/Fuel
E = Electric (Radiant Ceran)
C = Coil
I = Induction
G = Gas
D = Dual Fuel

Series
1 = OPP
3 = Low Line
5 = Mid Line
7 = High (GOLD)
9 = Hero (GOLD)

Feature Level/Key Feature
Feature Level (0-9)

Feature Level/Key Feature
Feature Level (0-9)

Key Feature
M = Standard Clean
W = Steam Clean
S = Self Clean
H = He Self Clean
C = Steam Clean and Self Clean

Size
0 = 30" Width
2 = 42" Width
4 = 24" Width
6 = 36" Width
8 = 48" Width
T = 20" Width

YEAR
F = 2016
G = 2017
H = 2018
J = 2019

KitchenAid® Model Nomenclature

MODEL NUMBER	K	F	E	G	50	0	E

Brand
K = KitchenAid

Categories
C = Cooktop
O = Wall oven
F = Freestanding Range
S = Slide-In Range
M = Microwave Oven

Configuration/Fuel
D = Duel Fuel
E = Electric
G = Gas
I = Induction Cooktop

Product Detail
C = Commercial Style
D = Double Oven
G = Storage Drawer
W = Warming Drawer
S = Slowcook Drawer
B = Baking Drawer

Feature Pack
10 = Thermal Cooking
30 = Fan Convection
50 = True Convection
55 = True Convection + Mini Oven
60 = True Convection + Steam
65 = True Convection + Steam Mini Oven
75 = Even-Heat™ True Convection

Capacity/Width
0 = 30"
6 = 36"
8 = 48"

Year
D = 2014
E = 2015
F = 2016

JennAir® Model Nomenclature

MODEL NUMBER	J	D	S	14	50	F

Brand
J = JennAir

Categories
G = Gas
E = Electric
D = Duel Fuel
I = Induction

Configuration
S = Slide-In Single
F = Freestanding
B = Double Oven or Slide-In
Q = Double Oven or non Slide-In

Installation
14 = Updraft
17 = Downdraft

Size
50 = No meaning

Year
F = 2016
G = 2017
H = 2018
I = 2019

Maytag® Model Nomenclature

MODEL NUMBER	Y	M	E	S	8	8	0	0	F

Country
Y = Canada

Brand
M = Maytag

Fuel
E = Electric
G = Gas
I = Induction

Product Type
R = Free Standing Range
D = Drop-In Range
S = Slide-In Range
T = Two-oven Free Standing Range

Feature Pack 1st Digit
7 = Flat door w/extra large window
8 = Deep door w/extra large window (chamfer)
H = Home Depot derivative

Feature Pack 2nd Digit
6 = Thermal
7 = Fan Convection
8 = True Convection

Feature Pack 3rd Digit
0 = no meaning

Feature Pack 4th Digit
0 = no meaning

Year
D = 2014
E = 2015
F = 2016

Tech Sheet Location

Section 2: Diagnostics

This section provides diagnostic and fault codes information for the “Whirlpool®, Maytag®, KitchenAid®, Kenmore®, JennAir®, IKEA®, and Amana® Ranges.”

- Safety
- Diagnostics Mode
- Error Codes

For Service Technician Use Only

Safety

⚠ DANGER

Electrical Shock Hazard

Only authorized technicians should perform diagnostic voltage measurements.

After performing voltage measurements, disconnect power before servicing.

Failure to follow these instructions can result in death or electrical shock.

⚠ WARNING

Electrical Shock Hazard

Disconnect power before servicing.

Replace all parts and panels before operating.

Failure to do so can result in death or electrical shock.

Voltage Measurement Safety Information

When performing live voltage measurements, you must do the following:

- **Verify the controls are in the off position so that the appliance does not start when energized.**
- **Allow enough space to perform the voltage measurements without obstructions.**
- **Keep other people a safe distance away from the appliance to prevent potential injury.**
- **Always use the proper testing equipment.**
- **After voltage measurements, always disconnect power before servicing.**

IMPORTANT: Electrostatic Discharge (ESD) Sensitive Electronics

ESD problems are present everywhere. ESD may damage or weaken the electronic control assembly. The new control assembly may appear to work well after repair is finished, but failure may occur at a later date due to ESD stress.

- Use an antistatic wrist strap. Connect wrist strap to green ground connection point or unpainted metal in the appliance

  -OR-

  Touch your finger repeatedly to a green ground connection point or unpainted metal in the appliance.
- Before removing the part from its package, touch the antistatic bag to a green ground connection point or unpainted metal in the appliance.
- Avoid touching electronic parts or terminal contacts; handle electronic control assembly by edges only.
- When repackaging failed electronic control assembly in antistatic bag, observe above instructions.

Caution: Label all wires prior to disconnection when servicing controls. Wiring errors can cause improper and dangerous operation. Verify proper operation after servicing.

For Service Technician Use Only

Diagnostics Mode

Diagnostics Mode (All Maxwell/MRC Controls)

IMPORTANT: You must run an Auto Test before performing any other diagnostics. Refer to steps 1 through 4 in the following chart to run Auto Test. Press CANCEL at any time to exit.

NOTE: On models with a numeric keypad on the control, press the “3” key instead of the “up” arrow or “+” (plus) keypad. Press the “6” key instead of the “down” arrow or “-” (minus) keypad. On some models, press the OFF keypad if there is not a CANCEL keypad.

Step	Keypress	Notes
1	CANCEL>CANCEL>START	“TEST ON” with cavity temperature and door position, “UO” = Oven door closed or “UI” = Oven door open
2	Press the “up” arrow, the “+” (plus) key or the “3” key to scroll through the service modes to Auto Test.	“AUTO TEST”
3	Follow the display prompts to run Auto Test to observe the following results:	
	Result #1 - Do not replace the control.	“Control is GOOD, no faults found”.
	Result #2 - Tests completed with failure/fault codes.	Failure/Fault codes are listed in scrolling text. **NOTE:** Failures are problems within the control. Faults are problems beyond the control (for example, “0 Failures and 2 Faults found - Control is good.” There is a problem with a wiring harness, wiring connection or component outside the control).
4	Press CANCEL to exit. Refer to the “Failure/Error Display Codes” section to correct.	

Service Modes (All Maxwell/MRC Controls)

Press CANCEL>CANCEL>START to enter Service Mode.

NOTE: On models with a numeric keypad on the control, press the “3” key instead of the “up” arrow or “+” (plus) keypad. Press the “6” key instead of the “down” arrow or “-” (minus) keypad. On some models, press the OFF keypad if there is not a CANCEL keypad.

Step	Service Mode	Service Mode Description
Upon entry	TEST ON	Perform relay checks. See the “Relay Checks for Maxwell/MRC Control” section. Press the key that is listed in the “Key Press” column for the desired function and display. Display shows oven temperature from oven temperature sensor and door position (0-closed, 1-open).
1	USAGE	Displays the usage time in hours for several range functions.
2	ENG MODE	Press START to enter, and then press the “+” keypad. Press START again, and the display will show the temperature of the oven sensor. Press the TIMER SET/OFF keypad to scroll between the oven sensor temperature, the warming drawer sensor temperature and the control board sensor temperature. Press CANCEL twice at any time to exit.
3	TEST MODE	Perform relay checks. See the “Relay Checks for Maxwell/MRC Control” section. Press the key that is listed in the “Key Press” column for the desired function.
4	VERSION	Displays software version.
5	DISPLAY	Displays all Maxwell/MRC control LEDs.
6	CONTROL RESET	DO NOT USE this Service Mode - for Engineering Use Only.
7	FAULTS	Displays the most recent fault code. The last 10 faults are stored and may be cleared by following the prompts. Clear faults as directed by pressing START TIME or DELAY START.
8	EXTERNAL FAULTS	Displays most recent fault codes associated with the EGO cooktop controls. The past 10 faults are stored and may be cleared by following the prompts. Clear faults as directed by pressing START TIME or DELAY START.
9	RELAY USAGE	Displays the usage time in hours for several range functions.
10	AUTO TEST	Automatic diagnostics mode that must be run before performing any other diagnostic or before replacing the control.

For Service Technician Use Only

Relay Checks for Maxwell/MRC Controls

NOTE: Relays are activated from the TEST ON service mode. Press CANCEL at any time to exit. Some of the functions listed below may not be on your range.

Function	Key Press	Description	Display
Bake relay	BAKE	Turns Bake element ON. Press again to turn Bake element OFF.	b
Broil relay	BROIL	Turns Broil element ON. Press again to turn Broil element OFF.	r
Convect relay	CONVECT or CONVECT BAKE	Turns convection element ON. Press again to turn convection element OFF.	c
Warming drawer relay	WARM DRAWER (on some models)	Turns warming drawer element ON. Press again to turn warming drawer element OFF.	d
Oven light relay	OVEN LIGHT	Turns oven light ON. Press again to turn oven light OFF	%
Latch motor relay	PRECISE CLEAN or SELF CLEAN	Press to lock the door (motorized door latch [MDL]). Press again to unlock the door.	UO (MDL unlocked) LO (MDL locked)
Convection fan relay	RAPID PREHEAT, CONVECTION ROAST or COOK TIME	Turns convection fan ON. Press again to turn convection fan OFF.	H
Warming zone relay	WARM ZONE ON or WARMING CENTER ON	Turns warming zone element ON. Press again to turn warming zone element OFF. (electric models only)	WZ

- All elements (depending on which cycle is being used) will operate with the oven door open.
- Latch motor will not cycle with oven door open.
- On electric models, the DLB (double line break) will engage on entering the Diagnostics Mode and disengage on exit.

Diagnostics Mode (All LCC/LCX Controls)

Notes:

- Entering Diagnostics mode will cancel any active oven operation.
- Enter the Diagnostics mode only after the oven is cool.

Enter Diagnostics Mode by pressing CANCEL>CANCEL>START within a 5-second period.

Step No.	Keypad Pressed	Setting	Control Display 3-Digit LCC 90/95	Control Display 4-Digit LCC 180/190	Control Display (LCX Control)	Diagnostics Mode Operation Descriptions
1	CANCEL>CANCEL>START	1st	“tSt”	tESt	“tSt”	Initial display Perform Diagnostics Test mode relay checks. See “Diagnostics Test Mode (All LCC/LCX Controls)” section.
2	Press the “up” arrow keypad to scroll through the diagnostics settings.	2nd	### °F or °C	### °F or °C	### °F or °C	Oven sensor temperature
		3rd	-30 to 30 for degrees F or -17 to 17 for degrees C	-30 to 30 for degrees F or -17 to 17 for degrees C	U 00 through U 30 or U 00 through U-30 °F or °C	User cooking offset. “-” (minus) indicates a negative number.
		4th	S ##	S ###	S## ## ##	Software version
		5th	###	####	Ch ###	Memory checksum
		6th	####	GOOd	Ok or CLr	Displayed if there is no error code.
		6a	F#	F#E#	F#E#	Displayed if an error code is present. Press START to clear error code.
		6b	##	####	##	Accumulated days of operation before error code. Displayed only if an error code is present.
		7th	##### (0 - 1999)	#### (0 - 1999)	##### (0- 1999)	Total accumulated days of operation
		8th	00 or 01	00 or 01	00 or 01	Latch and door switch state: 00 = open (unlocked), 01 = closed (unlocked)

For Service Technician Use Only

Step No.	Keypad Pressed	Setting	Control Display 3-Digit LCC 90/95	Control Display 4-Digit LCC 180/190	Control Display (LCX Control)	Diagnostics Mode Operation Descriptions
3	If an error code is present, follow the suggested action procedure listed for the displayed code as listed in the "Failure/Error Display Codes (All LCX/LCC Control Displays)" section. If OK or CLr or Good is displayed, do not continue the relay checks in Diagnostics Test mode.					
4	While still in the Diagnostics mode, press the keypads below as indicated to test individual control relays.					

NOTE: Relays are activated from the TEST ON service mode. Press CANCEL at any time to exit. Some of the functions listed below may not be on your range.

Function	Step	Display Description
Bake relay	Press BAKE	Turns bake element from Off to On or from On to Off.
Broil relay	Press BROIL	Turns broil element from Off to On or from On to Off.
Latch motor relay	Press SELF CLEAN	Cycles the latch motor; control is looking for the switch change. The door should be locked within 10 seconds of pressing the Self Clean keypad. Press SELF CLEAN a second time to cycle the latch motor to the unlock position.
Oven light relay	Press OVEN LIGHT	Turns oven light On or Off; "OL" is displayed.
LED display check	Press CLOCK or TIMER SET/OFF	Turns on all LED display segments. Press again to return to previous display.
Enunciator operation	Press START	Emits tone for validation
Exit Diagnostics Mode	Press CANCEL	Emits tone and exits Diagnostics Mode

NOTES:

During Diagnostics:

- Elements will operate with the door open, depending on the cycle chosen.
- Latch motor will not cycle with the door open.
- The DLB (Double Line Break) will engage on entry into Diagnostics Test Mode and disengage on exit from Diagnostics Test Mode (electric models only).

Diagnostics Mode (Indigo Controls)

Unplug range or disconnect power before performing the following checks:

- A potential cause of a control not functioning is corrosion on connections. Observe the connections and check for continuity with an ohmmeter.
- All tests/checks should be made with a VOM or DVM having a sensitivity of 20,000 Ω per volt DC or greater.
- Check all connections before replacing components, looking for broken or loose wires, failed terminals, or wires not pressed into connections far enough. Damaged harness must be entirely replaced. Do not rework a harness.
- Resistance checks must be made with power cord unplugged from outlet and with wiring harness or connectors disconnected.

General Procedure (Indigo Controls)

1. Plug in range or connect power.
   IMPORTANT: Within Diagnostics mode are numerous features for the service technician to work with. Follow the information on the display to walk through the entire test to identify the fault code and the components that require attention.
2. Entering Diagnostics: Before proceeding with any corrective action, perform the following steps to enter the Diagnostics Mode.
   Option 1:

   1. Enter Diagnostics Mode by pressing the same three keypads three times in a row. Press HOME>FAVORITES>LIGHT (repeat three times).

   2. The warning will be disabled. Press Enter.
   NOTE: You do not need to wait for any audible or visual feedback from the control between keypad presses.

   3. If control does not enter Diagnostics Mode, continue repeating the keypad sequence from Step 1.

   4. From the Diagnostics Menu, scroll to the desired selection using the touch screen.

For Service Technician Use Only

Option 2:

1. Press TOOLS>INFO>SERVICE AND SUPPORT. Press the Diagnostics button for 1 minute. Press 1,2,3,1,2,3,1,2,3. Press ENTER.
   NOTE: The warning will be displayed. Press ENTER.
2. If control does not enter Diagnostics Mode, continue repeating the keypad sequence from Step 1.
3. From the Diagnostics Menu, scroll to the desired selection using the touch screen.
   NOTE: After each test, press CANCEL to return to the clock. Reenter the Diagnostics Mode by pressing three different keys three times in a row.

3. Scroll down to read the following:
- Error Diagnostic: View and clear the failure history.
- Clear History
- System Info: View the model number, serial number, and software versions.
- Factory Setting
- Component Activation: Manually activate each relay.

4. To activate the relays manually, press the following keypads:

Keypad Pressed	Relay Activated
Bake (Main)	K4 (bake igniter or element) On/Off
Broil	K5 (broil igniter or element) On/Off
Convect	K2 (convection element) On/Off
Convect Fan	K7 (convection fan)
Cooling Fan	K9 (cooling fan)
Light	K6 (oven light) On/Off

If the control reads that the cavity sensor is open, shorted, or not connected, it will display error code “F3E0.”

NOTES:
- The Cancel keypad can be pressed at any time when the control is in the Diagnostics Mode or any of the submenus. Pressing the Cancel keypad twice will return the control to the time of day screen.
- Entering Diagnostics Mode will cancel any active oven operation.
- Enter the Diagnostics Mode only after the oven is cool.
- Automatic test is a self-diagnostic function built into the oven control.
- Diagnostics Mode automatically times out and returns to the time of day screen after 5 minutes.
- To erase all error codes: Enter Diagnostics Mode by pressing three different keys three times in a row. Enter the Diagnostics Mode to view the “Diagnostics Home” screen. Press the “Clear Error History” keypad to clear each fault code.

For Service Technician Use Only

Failure/Error Display Codes (All Maxwell/MRC Control Displays)

Display Codes		Likely Failure Condition	Suggested Corrective Action Procedure
F1	**E0**	EEPROM comm error	**1.** Press CANCEL>CANCEL>START to enter the Diagnostics Mode and verify the error code. **2.** If an F1 error code is displayed, unplug range or disconnect power. Replace the oven control and then go to Step 4. **3.** If an F2 error code is displayed, unplug range or disconnect power. Replace the user interface (keypad membrane) and then go to Step 4. **4.** Replace all parts and panels before operating. **5.** Plug in range or reconnect power. **6.** Verify operation is normal. Go to the Diagnostics Mode and scroll to the Faults display to clear faults.
	E5	Sensor out of range	
	E7	PCB thermistor open or shorted	
	E9	WIDE queue full	
F2	**E0**	Keypad disconnected	
	E1	Stuck key	
	E2	Cancel key error	
F3	**E0**	Main sensor open or shorted 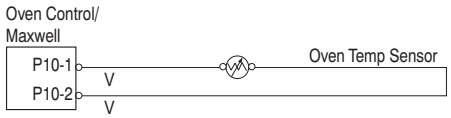 	**1.** Press CANCEL>CANCEL>START to enter the Diagnostics Mode. At the first screen, verify the main oven sensor temperature readout. If available, verify the warming drawer sensor temperature readout. **2.** Continue in the Diagnostic Mode to verify the error code. **3.** If an F3E0 error code is displayed and the main oven sensor temperature reading is near room temperature, unplug range or disconnect power. Replace the main oven sensor as a failure at high temperature may be the cause of the fault. Then go to Step 9. If the sensor does not read room temperature, go to Step 5. **4.** If an F3E2 error code is displayed and the warming drawer sensor temperature reading is near room temperature, unplug range or disconnect power. Replace the warming drawer sensor as a failure at high temperature may be the cause of the fault. Then go to Step 9. If the sensor does not read room temperature, go to Step 5. **5.** Check all sensor connections on the harness and board. **6.** Disconnect sensor from the harness. **7.** Measure the oven sensor resistance (between connector pins). It should read between 1,000 Ω and 1,200 Ω. Measure the resistance from the sensor connector pins to the sensor casing for a possible short. If the resistance measurement is out of range, or if a short is found, replace the sensor. **8.** Inspect the wire and connectors from the control to the sensor. If any damage is noted, replace the harness. **9.** Replace all parts and panels before operating. **10.** Plug in range or reconnect power. **11.** Verify operation is normal for longer than 1 minute. Go to the Diagnostics Mode and scroll to the Faults display to clear faults.
F3	**E2**	Warming drawer sensor open or shorted 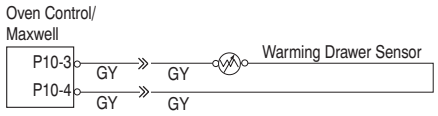 	
F5	**E0**	Door and switch do not agree (Clean mode—on some models) 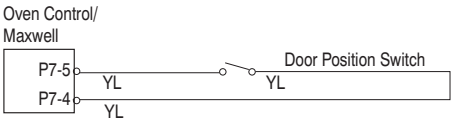 	**1.** Press CANCEL>CANCEL>START to enter the Diagnostics Mode and verify the error code. **2.** Press the CANCEL/OFF key. Press CANCEL>CANCEL>START to re-enter the Diagnostics Mode. With “TEST ON” displayed, open the oven door and fully engage the door switch. If the display does not change from “UI” to “UO,” go to Step 4. If the display does change, go to Step 3. **3.** Inspect door and frame for warping or misalignment keeping the door from fully engaging the door switch. Make any necessary repairs then go to Step 7. **4.** Unplug range or disconnect power. **5.** Verify the actuating rod connection from the front frame to the door switch. **6.** If there is damage to wires or connectors, replace the harness. If there is no damage to wires or connectors, replace the door switch. **7.** Replace all parts and panels before operating. **8.** Plug in range or reconnect power. **9.** Press CANCEL/OFF key, select and start the SELF-CLEAN function. Observe for at least 1 minute to ensure that operation is normal. **10.** Go to the Diagnostics Mode and scroll to the Faults display to clear faults.

For Service Technician Use Only

Display Codes		Likely Failure Condition	Suggested Corrective Action Procedure
F5	**E1**	Door latch not operating (Clean mode - on some models)	**1.** Press CANCEL>CANCEL>START to enter the Diagnostics Mode and verify the error code. **2.** Press the CANCEL/OFF key. Press CANCEL>CANCEL>START to re-enter the Diagnostics Mode. With "TEST ON" displayed, press the SELF CLEAN or PRECISE CLEAN key to run the lock motor. **a.** If the lock icon remains lit after 8-10 seconds, verify that the door is locked. If the door is not locked, press the SELF CLEAN or PRECISE CLEAN key a second time. When the lock icon turns off, go to Step 3. **b.** If the lock icon is flashing, pull on the oven door handle every 4-5 seconds to check if the door is locked. The flashing will stop after 45 seconds with the door unlocked. **3.** Unplug range or disconnect power. **4.** Verify the wires and connectors between the latch assembly and control are seated properly. If the lock icon stayed lit in Step 2a, go to Step 7. If the door is latched in Step 2b, go to Step 5. **5.** If the door is latched in Step 2b, check for continuity across the door latch switch with the switch depressed. If the switch measures open, replace the latch motor assembly. Go to Step 7. **6.** If the door did not lock in Step 2b, check for continuity from P5-3 to P6-3. If the circuit is open or if the resistance of the latch motor is not between 500 Ω and 3,000 Ω, replace the motor latch assembly. **7.** Verify the actuating rod connection between the latch and latch motor. **8.** Replace all parts and panels before operating. **9.** Plug in range or reconnect power. **10.** Press CANCEL/OFF key. Select and start the SELF-CLEAN or PRECISE CLEAN function. Observe for at least 1 minute to ensure that operation is normal. **11.** Press CANCEL>CANCEL>START to enter the Diagnostics Mode and scroll to the Faults display to clear faults.
F6	**E1**	Over temp cook	**1.** Press CANCEL>CANCEL>START to enter the Diagnostics Mode and verify the error code. **2.** Unplug range or disconnect power. **3.** Replace control. **4.** Replace all parts and panels before operating. **5.** Plug in range or reconnect power. **6.** Verify operation is normal.
	E2	Over temp clean	
	E3	Over temp (warming drawer)	
F9	**E0**	Mis-wired house or range	**1.** Verify failure by displaying diagnostics mode screen (see "Diagnostics Mode for Maxwell Control" section). Press the TEMP/TIME "+" or "-" keypads or the Number 3 or 6 keypads, depending on the model, until "Faults" is displayed. Press START to verify codes. If failure displayed does match, then continue. **2.** Unplug range or disconnect power. **3.** Check wires and connectors between control board (P6) and power cord. **4.** Check that the L1-L2-N wiring (pigtail) from the wall outlet is correctly connected to the range. Have a qualified electrician verify that the house wiring is wired properly between the circuit breaker panel and the wall outlet. **5.** Verify wires and connectors between the Maxwell connector P6 and the power cord. **6.** Replace all parts and panels before operating. **7.** Plug in range or reconnect power. **8.** Press CANCEL/OFF key, program and start the Clean mode, and observe for 1 minute to ensure that operation is normal. **9.** Verify operation is normal. Go to diagnostics screen and verify that there are no fault codes. **10.** Press DELAY START to clear the fault code.

For Service Technician Use Only

Failure/Error Display Codes (All LCC/LCX Control Displays)

LCC 90/95 Codes	LCC 180/190 Codes	Likely Failure Condition	Suggested Corrective Action Procedure
No display	**No display**	Control not operational	Check for proper voltage input at CON 2-4 to CON 1-1 by completing the following steps: **1.** Unplug range or disconnect power. **2.** Connect voltage measurement equipment. **3.** Plug in range or reconnect power and confirm voltage reading is 120 V. If it is, unplug range or disconnect power and go to Step 4. If it is not, unplug range or disconnect power and go to Step 5. **4.** Replace the control. Go to Step 6. **5.** Check wires and connectors between the control and terminal block and make sure connectors are fully seated. **6.** Replace all parts and panels before operating. **7.** Plug in range or reconnect power. **8.** Verify operation is normal. Press CANCEL>CANCEL>START to enter the Diagnostics Mode and verify that there are no error codes.
F1	**F1E0**	Internal board failure	**1.** Press CANCEL>CANCEL>START to enter the Diagnostics Mode and verify the failure code. If failure displayed does match, go to Step 2. **2.** Unplug range or disconnect power. **3.** Replace control. **4.** Replace all parts and panels before operating. **5.** Plug in range or reconnect power.
	F1E1		
	F1E2	A/D Error(s)	
F2	**F2E0**	Shorted key	
For LCX Control	**F2E1**	Shorted key	**1.** Unplug range or disconnect power. **2.** Inspect keypad connection to main control (P11). If connection is loose/unplugged, reconnect. **3.** Replace all parts and panels before operating. **4.** Plug in range or reconnect power. Allow 60 seconds for main control to identify keypad. If error code reappears, go to Step 5. If the error code does not reappear, go to Step 9. **5.** Unplug range or disconnect power. Inspect keypad connector (P11) to main control for sign of damage (cracked, ripped, etc.). If damage is found, go to Step 8. **6.** Replace all parts and panels before operating. **7.** Plug in range or reconnect power. Allow 60 seconds for main control to identify keypad. If error code reappears, go to Step 8. If the error code does not reappear, go to Step 9. **8.** Replace components in the following order of likelihood of failure: a. Keypad b. Main control **9.** Replace all parts and panels before operating. **10.** Plug in range or reconnect power. **11.** Verify operation is normal. Enter Diagnostics mode and verify that there are no error codes.

For Service Technician Use Only

LCC 90/95 Codes	LCC 180/190 Codes	Likely Failure Condition	Suggested Corrective Action Procedure
F3	**F3E0** **F3E1**	Oven sensor opened Oven sensor shorted	**1.** Press CANCEL>CANCEL>START to enter the Diagnostics Mode. Verify the sensor temperature reading is at room temperature (typically 50°F to 90°F [10°C to 32.2°C]) and verify failure code. If failure code does match, then continue. **2.** Unplug range or disconnect power. **3.** Check all sensor connections on harness and board. **4.** Disconnect sensor from harness. **5.** Measure sensor resistance between connector pins and confirm reading is between 1000 Ω and 1200 Ω at room temperature. Also measure from sensor connector to sensor casing for possible short. If measurement is not correct, or if short is found, replace sensor. **6.** Trace wires and connectors to sensor from control, then back to control. If wire or connection is damaged, replace the harness. If wire or connector is not damaged, replace oven temperature sensor. **7.** Reconnect the sensor to the harness. **8.** Replace all parts and panels before operating. **9.** Plug in range or reconnect power. **10.** Press CANCEL>CANCEL>START to enter the Diagnostics Mode and clear the error code. **11.** Press CANCEL to cancel the Diagnostics Mode. **12.** Press BAKE and START. Observe for longer than 1 minute. **13.** If failure does not reappear, stop. If failure remains, unplug range or disconnect power and check wire connections.
F3	**F3E2** **F3E3**	BAKE/BROIL range over temperature CLEAN range over temperature	
F5	**F5E0** **F5E2**	Door and door position switches do not agree (Clean mode)	**1.** Press CANCEL>CANCEL>START to enter the Diagnostics Mode and verify the failure code. If failure displayed does match, go to Step 2. **2.** Unplug range or disconnect power. **3.** Inspect door for warping or misalignment. Verify door switch continuity with switch fully depressed. **4.** Check wires and connectors from the control to the door switch then back to the control. If any wires or connectors are damaged, replace the wire harness. If no wires or connectors are damaged, replace the door switch. **5.** Replace all parts and panels before operating. **6.** Plug in range or reconnect power. **7.** Press CANCEL>CANCEL>START to enter the Diagnostics Mode and clear the error code. **8.** Program and start the clean cycle. Observe for longer than 1 minute. **9.** Verify operation is normal. Press CANCEL>CANCEL>START to enter the Diagnostics Mode and clear the error code.

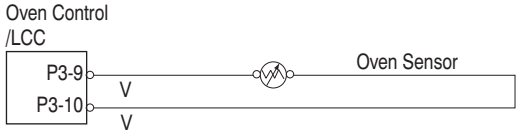

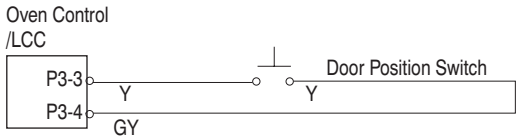

For Service Technician Use Only

LCC 90/95 Codes	LCC 180/190 Codes	Likely Failure Condition	Suggested Corrective Action Procedure
F5	**F5E1**	Door latch not operating (Clean mode - on some models)	**1.** Press CANCEL>CANCEL>START to enter the Diagnostics Mode and verify the failure. If failure displayed does match, go to Step 2. **2.** While in Diagnostics mode, press the SELF CLEAN key to run the lock motor. If the door is not latched (locked) and the door locked icon is lit, go to Step a. If the door is latched (locked) and the door locked icon is not lit, go to Step b. If the door is not latched (locked) and the door locked icon is not lit, go to Step c. **a.** The control, latch motor and latch switch are operating properly. Check the locking mechanism. **a1.** Unplug range or disconnect power. **a2.** Check the integrity of the latch mechanism from cam, through the actuating rod, to the latch pawl and door slot. **a3.** Ensure that the pawl aligns with the door slot. Correct any mechanical malfunction and go to Step c. **b.** The latch switch is not indicating that the door is locked. **b1.** Unplug range or disconnect power. **b2.** Replace the motor assembly (one of the switches on the motor assembly is defective) and go to Step 3. **c.** The latch motor relay or latch motor is not working. **c1.** Check for proper voltage at CON 1-4 to CON 1-1 when the latch motor should be running (within 20 seconds of pressing SELF CLEAN key) by completing the following steps. **c2.** Unplug range or disconnect power. **c3.** Connect voltage measurement equipment. **c4.** Plug in range or reconnect power and confirm voltage reading is 120 V. Unplug range or disconnect power. If voltage reading is 120 V, go to Step c6. If the voltage reading is not 120 V, go to Step c5. **c5.** Replace the control then go to Step 3. **c6.** Check continuity of the latch motor. If continuity is present, check the electrical connections and inspect for damage to the harness. Make any repairs, then go to Step 3. If continuity is not present, replace motor assembly. Go to Step 3. **3.** Replace all parts and panels before operating. **4.** Plug in range or reconnect power. **5.** Put range into Clean mode to verify proper operation. **6.** Verify normal operation.

For Service Technician Use Only

LCC 90/95 Codes	LCC 180/190 Codes	Likely Failure Condition	Suggested Corrective Action Procedure
For LCX Control	**F6E1**	Over temp cook	**1.** Enter Diagnostics mode by pressing CANCEL>CANCEL>START within 5 seconds. Oven temperature is displayed on the screen. Manually check the oven for heat. **If oven is** / **and temperature reading is** / **go to** Warm / Near 600°F (316°C) / Step 2 Warm / Room temperature / Step 4 Room temperature / Near 600°F (316°C) / Step 4 Room temperature / Room temperature / Step 5 **2.** Unplug range or disconnect power. Inspect control board connector P3 for a backed-out terminal or loose connection. If found, reconnect or replace harness and go to Step 5. If not, go to Step 3. **3.** Disconnect control board connector P3. Measure resistance across P3-4 and P3-5. At room temperature, the thermal sensor should read between 1000 Ω and 1200 Ω. Reconnect P3. If the test results are correct, replace the control board and go to Step 5. If the results are not correct, go to Step 4. **4.** Disconnect the oven sensor from the wiring harness and measure resistance across the sensor terminals. Resistance reading should be between 1000 Ω and 1200 Ω. If the test results are correct, replace the wiring harness between the sensor and the control board, and then go to Step 5. If the test results are not correct, replace the sensor and go to Step 5. **5.** Replace all parts and panels before operating. **6.** Plug in range or reconnect power. **7.** Verify operation is normal. Enter Diagnostics mode and verify that there are no error codes.
F9	**F9E0**	Mis-wired house or range	**1.** Press CANCEL>CANCEL>START to enter the Diagnostics Mode and verify the failure. If failure displayed does match, go to Step 2. **2.** Unplug range or disconnect power. **3.** Verify that the house power supply provides 240 VAC between L1 and L2, and 120 VAC between L1 and N and L2 and N. If house power supply is not correct, call a qualified electrician. If voltage measurements are correct, go to Step 4. **4.** Verify that the electric supply is wired correctly at the range terminal block. **5.** Verify that the resistance of the Bake element is within the specification stated in the Component Testing chart. If it is not within the specification, replace the Bake element. **6.** Replace all parts and panels before operating. **7.** Plug in range or reconnect power. **8.** Verify normal operation. **9.** Press CANCEL>CANCEL>START to enter the Diagnostics Mode and clear the error code(s).

For Service Technician Use Only

Failure/Error Display Codes (All Indigo Control)

Code	What Is It?	When Can It Occur?	Recommended Corrective Action Procedure
F1E0	**EEPROM Communication Error** The main control is locked up due to an unexpected communication event. This is often corrected by cycling power.	Immediately after the main control sees an unexpected event.	**1.** Cycle power to the range (wait 30 seconds before reapplying power). If the error code reappears, go to Step 2. If the error code does not reappear after 120 seconds, go to Step 6. **2.** Unplug range or disconnect power. **3.** Replace main control board. **4.** Reassemble all parts and panels before operating. **5.** Plug in range or reconnect power. **6.** Verify operation is normal. Enter the Diagnostics mode to view the “Diagnostics Home” screen. Press the “Clear History Error” keypad to clear each fault code.
F2E0	**Keypad Disconnected** The main control no longer sees the keypad.	Within 60 seconds of the keypad being disconnected.	**1.** Unplug range or disconnect power. **2.** Inspect keypad connection to main control. If connection is loose/unplugged, reconnect. **3.** Reassemble all parts and panels before operating. **4.** Plug in range or reconnect power. Allow 60 seconds for main control to identify keypad. If error code reappears, go to Step 5. If the error code does not reappear, go to Step 9. **5.** Unplug range or disconnect power. Inspect keypad connector, and keypad cable. If damage is found, go to Step 8. **6.** Reassemble all parts and panels before operating. **7.** Plug in range or reconnect power. Allow 60 seconds for main control to identify keypad. If error code reappears, go to Step 8. If the error code does not reappear, go to Step 9. **8.** Replace the HMI-Central/UI board Control Panel Assembly. **9.** Reassemble all parts and panels before operating. **10.** Plug in range or reconnect power. **11.** Verify operation is normal. Enter the Diagnostics mode to view the “Diagnostics Home” screen. Press the “Clear History Error” keypad to clear each fault code. If the Control Panel Assembly was replaced, there is no need to clear the error history.
F2E1	**Stuck Keypad** A keypad has been pressed for an extended period of time. This could be the result of the user pressing a keypad for too long.	Within 120 seconds of a keypad being pressed and held.	**1.** Disconnect power to the range (wait 30 seconds before reapplying power). If the error code reappears, go to Step 2. If the error code does not reappear after 120 seconds, go to Step 6. **2.** Unplug range or disconnect power. **3.** Replace the HMI-Central/UI board Control Panel Assembly. **4.** Reassemble all parts and panels before operating. **5.** Plug in range or reconnect power. **6.** Verify operation is normal. Enter the Diagnostics mode to view the “Diagnostics Home” screen. Press the “Clear History Error” keypad to clear each fault code. If the Control Panel Assembly was replaced, there is no need to clear the error history.

For Service Technician Use Only

Code	What Is It?	When Can It Occur?	Recommended Corrective Action Procedure
F3E0	**Main Oven Sensor Open or Shorted** Main oven temperature reading greater than 995°F (535°C) or less than 0°F (-18°C). 	Within 20 seconds of activating a cook or clean function.	**1.** Unplug range or disconnect power. **2.** Inspect control board connector P10 for a backed-out terminal or loose connection. If found, reconnect or replace harness and go to Step 10. If not, go to Step 3. **3.** Disconnect control board connector P10. Measure resistance across P10-3 and P10-4. At room temperature, the thermal sensor should read between 1000 Ω and 1200 Ω. Reconnect P10. If test results are good, go to Step 4. If test results are not correct, go to Step 9. **4.** Reassemble all parts and panels before operating. **5.** Plug in range or reconnect power. **6.** Enter a cook function (e.g., Bake). If the error code doesn't reappear after 20 seconds, go to Step 13. If the error code reappears, go to Step 7. **7.** Unplug range or disconnect power. **8.** Replace main ACU and go to Step 10. **9.** Inspect connection at main oven thermal sensor. Disconnect and measure resistance across thermal sensor terminals. At room temperature, the thermal sensor should read between 1000 Ω and 1200 Ω. If resistance measured out of range, replace thermal sensor. If resistance measured within range, replace harness. **10.** Reassemble all parts and panels before operating. **11.** Plug in range or reconnect power. **12.** Enter a cook function (e.g., Bake) and verify the error code doesn't reappear after 20 seconds. **13.** Verify operation is normal. Enter the Diagnostics mode to view the "Diagnostics Home" screen. Press the "Clear History Error" keypad to clear each fault code.
F6E0	**Oven User Interface** Lost Communication	Within 60 seconds of the fault condition when communication between UI and ACU is lost.	**1.** Unplug range or disconnect power. **2.** Confirm continuity of wiring between HMI-Central/UI board Control Panel Assembly and ACU. **3.** If continuity has been confirmed, reassemble all parts and panels before operating and plug in range or reconnect power. **4.** If the error reappears, open door and check if light is on. **5.** Unplug range or disconnect from power. **6.** If light was off, replace ACU. If light was on, replace HMI-Central/UI board Control Panel Assembly. **7.** Reassemble all parts and panels before operating. **8.** Plug in range or reconnect power. Repeat steps 4 and 5. **9.** Verify operation is normal. Enter the Diagnostics mode, select "Error Diagnostics," and clear the history. If the Control Panel Assembly was replaced, there is no need to clear the error history.

For Service Technician Use Only

Code	What Is It?	When Can It Occur?	Recommended Corrective Action Procedure
F6E1	**Oven Temp** Oven temperature is greater than 601°F (316°C). The affected oven will be locked out until the control detects an oven temperature less than 601°F (316°C).	Within 60 seconds of the control detecting an oven temperature condition.	**1.** Enter Diagnostics mode by pressing three different keys three times in a row. Oven temperature is displayed on the screen. Manually check oven for heat. **If oven is** / **and temperature reading is** / **go to** Warm / Near 600°F (316°C) / Step 2 Warm / Room Temperature / Step 4 Room Temperature / Near 600°F (316°C) / Step 4 Room Temperature / Room Temperature / Step 5 **2.** Unplug range or disconnect power. Inspect control board connector P10 for a backed-out terminal or loose connection. If found, reconnect or replace harness and go to Step 5. If not, go to Step 3. **3.** Disconnect the oven sensor from the wiring harness and measure resistance across the sensor terminals. Resistance reading should be between 1000 Ω and 1200 Ω. If test results are good, replace the wiring harness between the sensor and the control board, and then go to Step 5. If test results are not correct, replace the sensor and go to Step 5. **4.** Reassemble all parts and panels before operating. **5.** Plug in range or reconnect power. **6.** Verify operation is normal. Enter the Diagnostics mode to view the “Diagnostics Home” screen. Press the “Clear History Error” keypad to clear each fault code.
F6E4	**Oven User Interface** UI and ACU state status mismatch	Within 60 seconds of the fault condition when the UI and ACU status mismatch.	**1.** Record and Clear error. **2.** Exit from the diagnostic screen. **3.** Power cycle. **4.** Check that the range is working by trying Bake, Broil cycle, and turning on/off the light. If it does not work, unplug range or disconnect power and go to step 5. If it works, go to step 8. **5.** Check that all of the connections are correct. If all connections are correct, go to step 7. **6.** If connections are incorrect, correct the connections and repeat steps 3 and 4. If issue persists go to step 7. **7.** Replace ACU. **8.** Reassemble all parts and panels before operating. **9.** Check if error persists in Diagnostic mode. If it persists, go to step 7.
F8E0	**Cooling Fan Speed Too Low** Fan speed below 500 rpm, either because the fan is spinning too slowly or because there is a problem with the Hall Effect sensor.	Within 20 seconds of a fault condition when cavity temperature is above 170°F (77°C).	**1.** Unplug range or disconnect power. **2.** Remove the console to gain access to ACU. **3.** Verify there are no obstructions in the blower. If there is an obstruction, remove it and go to Step 6. If no obstructions, go to Step 4. **4.** Disconnect cooling fan connector and check the fan motor for 105 Ω resistance between. If the motor test is not good, replace motor and go to Step 6. If motor tests good, go to Step 5. **5.** Check the Hall Sensor by removing the control board P7 connector and testing for 5 VDC between P7-7 and P7-1. If test is good, go to Step 6. If test results are not correct, replace the Hall Sensor. **6.** Reassemble all parts and panels before operating. **7.** Plug in range or reconnect power. **8.** Start a cook cycle and check for proper operation. **9.** Verify operation is normal. Enter the Diagnostics mode to view the “Diagnostics Home” screen. Press the “Clear History Error” keypad to clear each fault code.

For Service Technician Use Only

Code	What Is It?	When Can It Occur?	Recommended Corrective Action Procedure
F8E2	**Cooling Fan Speed Too High** Fan speed above 5,000 rpm, either because the fan is spinning too quickly or because there is a problem with the Hall Effect sensor.	Within 20 seconds of a fault condition when cavity temperature is above 170°F (77°C).	**1.** Unplug range or disconnect power. **2.** Remove the console to gain access to cooling fan. **3.** Verify there are no obstructions in the blower. If there is an obstruction, remove it and go to Step 6. If no obstructions, go to Step 4. **4.** Disconnect cooling fan connector and check the fan motor for 105 Ω resistance. If the motor test is not good, replace motor and go to Step 6. If motor tests good, go to Step 5. **5.** Check the Hall Sensor connection to the motor. If test is good, go to Step 6. **6.** Reassemble all parts and panels before operating. **7.** Plug in range or reconnect power. **8.** Start a cool cycle and check for proper operation. **9.** Verify operation is normal. Enter the Diagnostics mode to view the “Diagnostics Home” screen. Press the “Clear History Error” keypad to clear each fault code.
F9E0	**Mis-wired** Product is mis-wired.	CLEAN range over temperature	**1.** Unplug range or disconnect power. **2.** Check wires and connectors between main control (P6) and power cord. **3.** Check that the L1-L2-N wiring (pigtail) from the power outlet is correctly connected to the range terminal block. Verify correct power supply to unit L1 to L2 = 220 V, L1 to Neutral =120 V, and L2 to Neutral = 120 V. **4.** Reassemble all parts and panels before operating. **5.** Plug in range or reconnect power. **6.** Verify operation is normal. Enter the Diagnostics mode to view the “Diagnostics Home” screen. Press the “Clear History Error” keypad to clear each fault code.

Section 3: Component Testing

This section provides the wiring diagram, component testing, and component location for the "Whirlpool®, Maytag®, KitchenAid®, Kenmore®, JennAir®, IKEA®, and Amana® Ranges."

- Safety
- Wiring Diagram
- Component Testing
- Component Location

For Service Technician Use Only

Safety

⚠ DANGER

Electrical Shock Hazard

Only authorized technicians should perform diagnostic voltage measurements.

After performing voltage measurements, disconnect power before servicing.

Failure to follow these instructions can result in death or electrical shock.

⚠ WARNING

Electrical Shock Hazard

Disconnect power before servicing.

Replace all parts and panels before operating.

Failure to do so can result in death or electrical shock.

Voltage Measurement Safety Information

When performing live voltage measurements, you must do the following:

- **Verify the controls are in the off position so that the appliance does not start when energized.**
- **Allow enough space to perform the voltage measurements without obstructions.**
- **Keep other people a safe distance away from the appliance to prevent potential injury.**
- **Always use the proper testing equipment.**
- **After voltage measurements, always disconnect power before servicing.**

IMPORTANT: Electrostatic Discharge (ESD) Sensitive Electronics

ESD problems are present everywhere. ESD may damage or weaken the electronic control assembly. The new control assembly may appear to work well after repair is finished, but failure may occur at a later date due to ESD stress.

- Use an antistatic wrist strap. Connect wrist strap to green ground connection point or unpainted metal in the appliance

  -OR-

  Touch your finger repeatedly to a green ground connection point or unpainted metal in the appliance.
- Before removing the part from its package, touch the antistatic bag to a green ground connection point or unpainted metal in the appliance.
- Avoid touching electronic parts or terminal contacts; handle electronic control assembly by edges only.
- When repackaging failed electronic control assembly in antistatic bag, observe above instructions.

Caution: Label all wires prior to disconnection when servicing controls. Wiring errors can cause improper and dangerous operation. Verify proper operation after servicing.

For Service Technician Use Only

Wiring Diagram

Wiring diagram for models KFGG500E and KFGS530E

NOTE: Schematic shows door latch switch in the COOK position with oven door open and elements off.

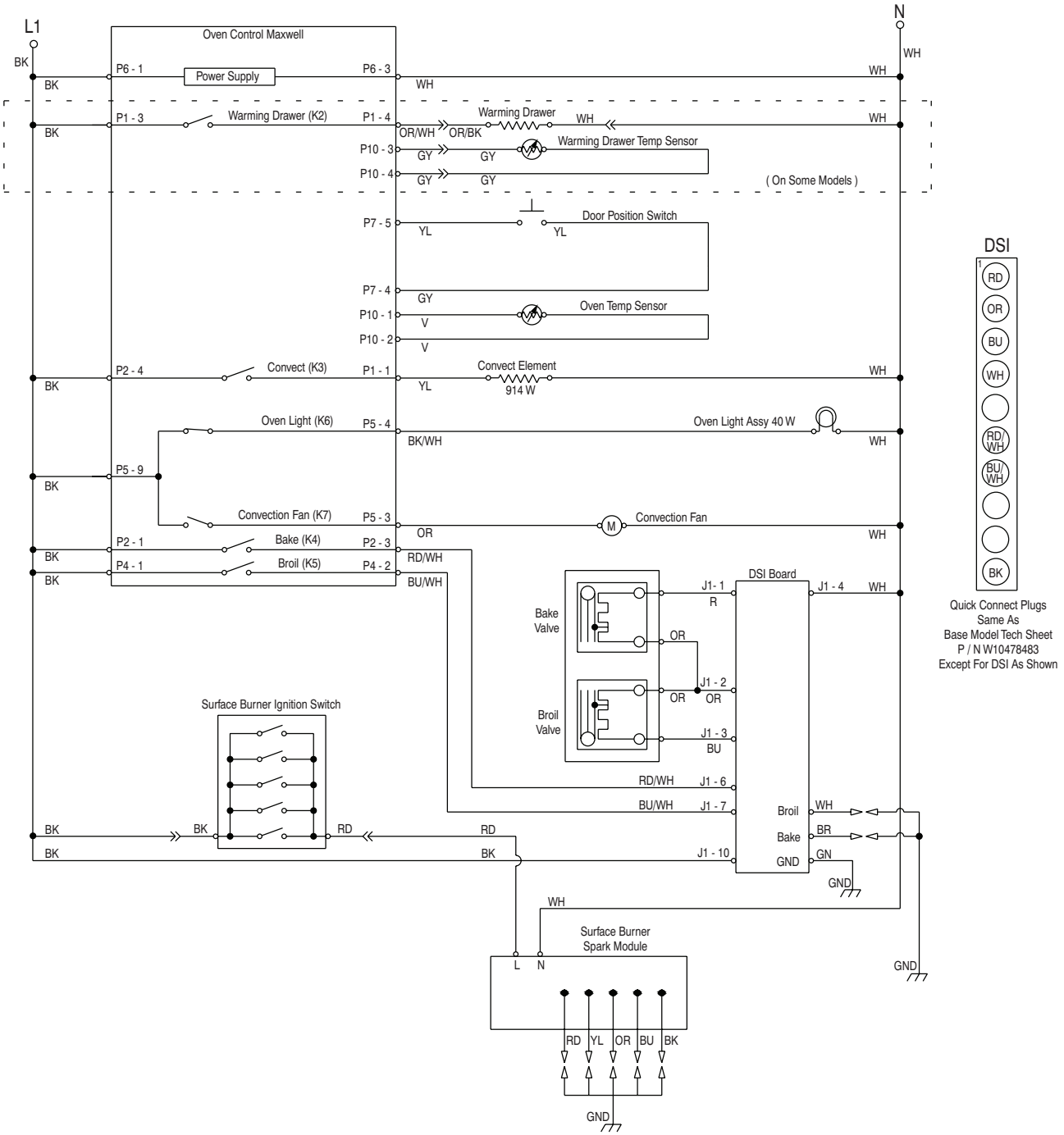

LEGEND

Component Terminals	Connection	No Connection	On Some Models	In Line Connection	P1-2 = Connnector P1, Pin 2	Multiple Functions / Circuitry Enclosed Within

For Service Technician Use Only

Wiring diagram for models MER8800F and YMER8800F

NOTE: Schematic shows oven door open and elements off.

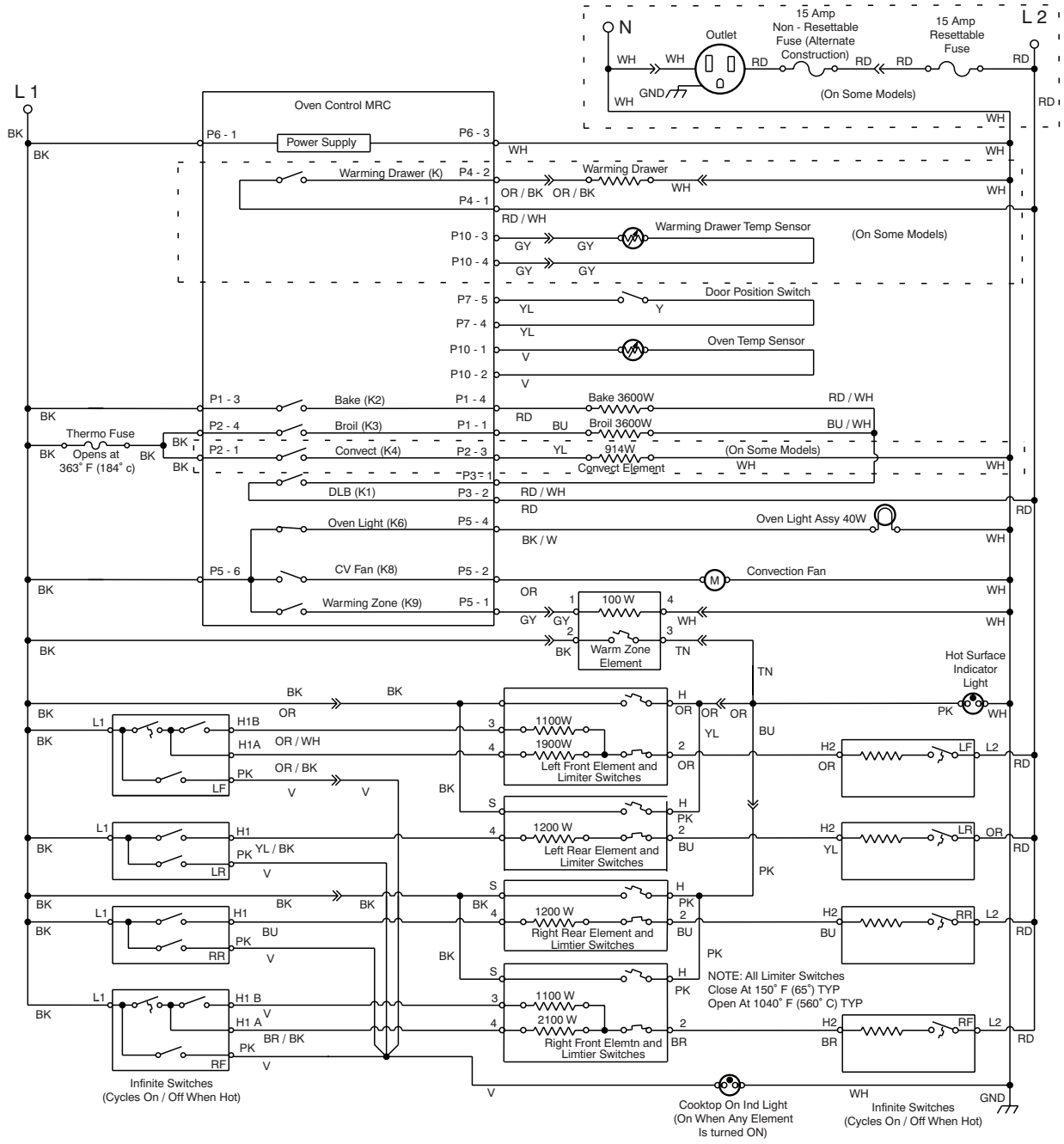

LEGEND

Component Terminals	Connection (Splice)	No Connection	On Some Models	In Line Connection	P1-2 = Connector P1 Position 2	Multiple Functions / Circuitry Enclosed Within

For Service Technician Use Only

Wiring diagram for models MGR8800F and WFG975H0H

NOTE: Schematic shows door latch switch in the COOK position with oven door open and elements off.

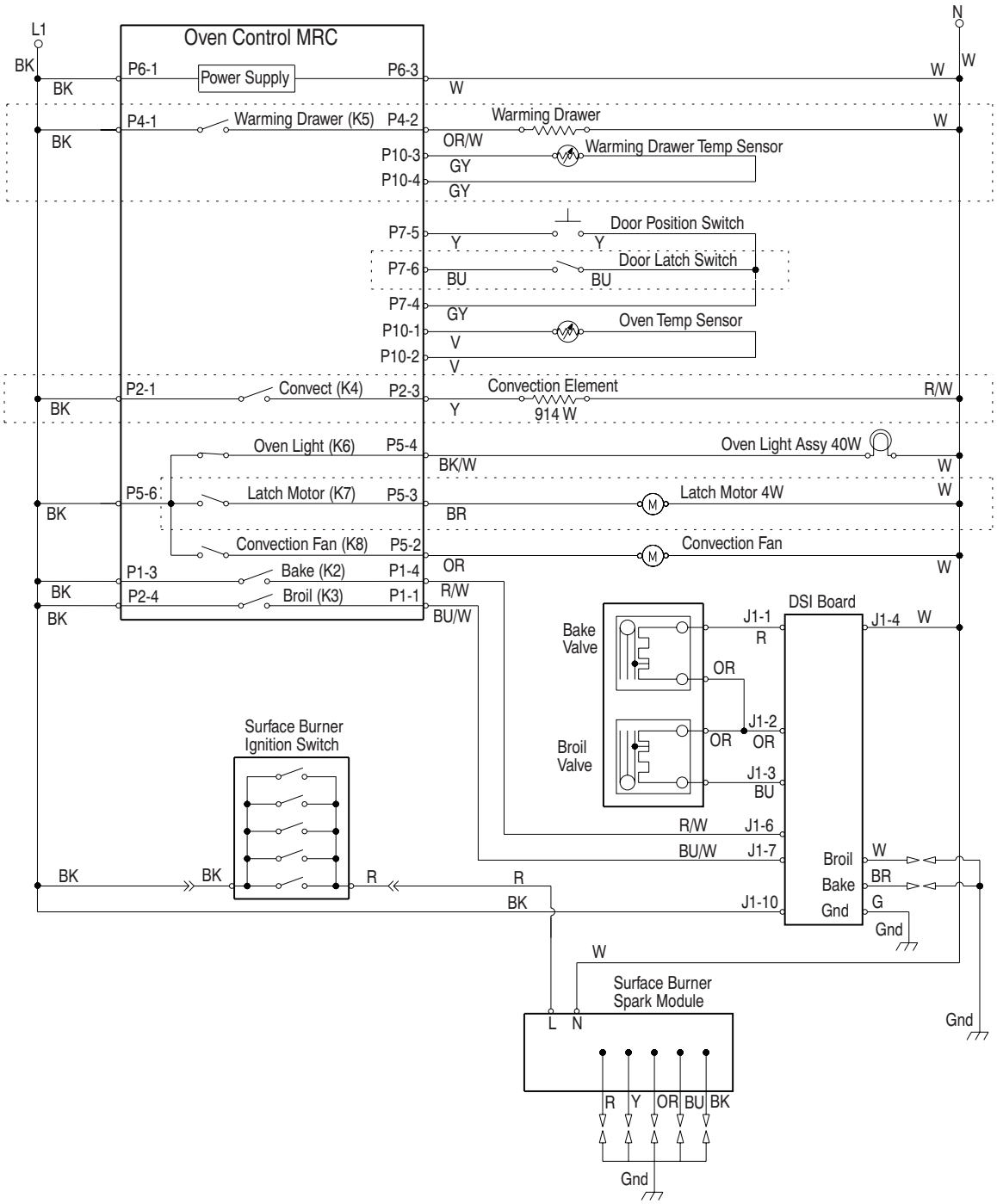

LEGEND

Component Terminals	Connection	No Connection	On Some Models	In Line Connection	P1-2 = Connector 1 P1 Position 2	Multiple Functions / Circuitry Enclosed Within

For Service Technician Use Only

Wiring diagram for models WFE540H0E

NOTE: Schematic shows the oven door open and elements off.

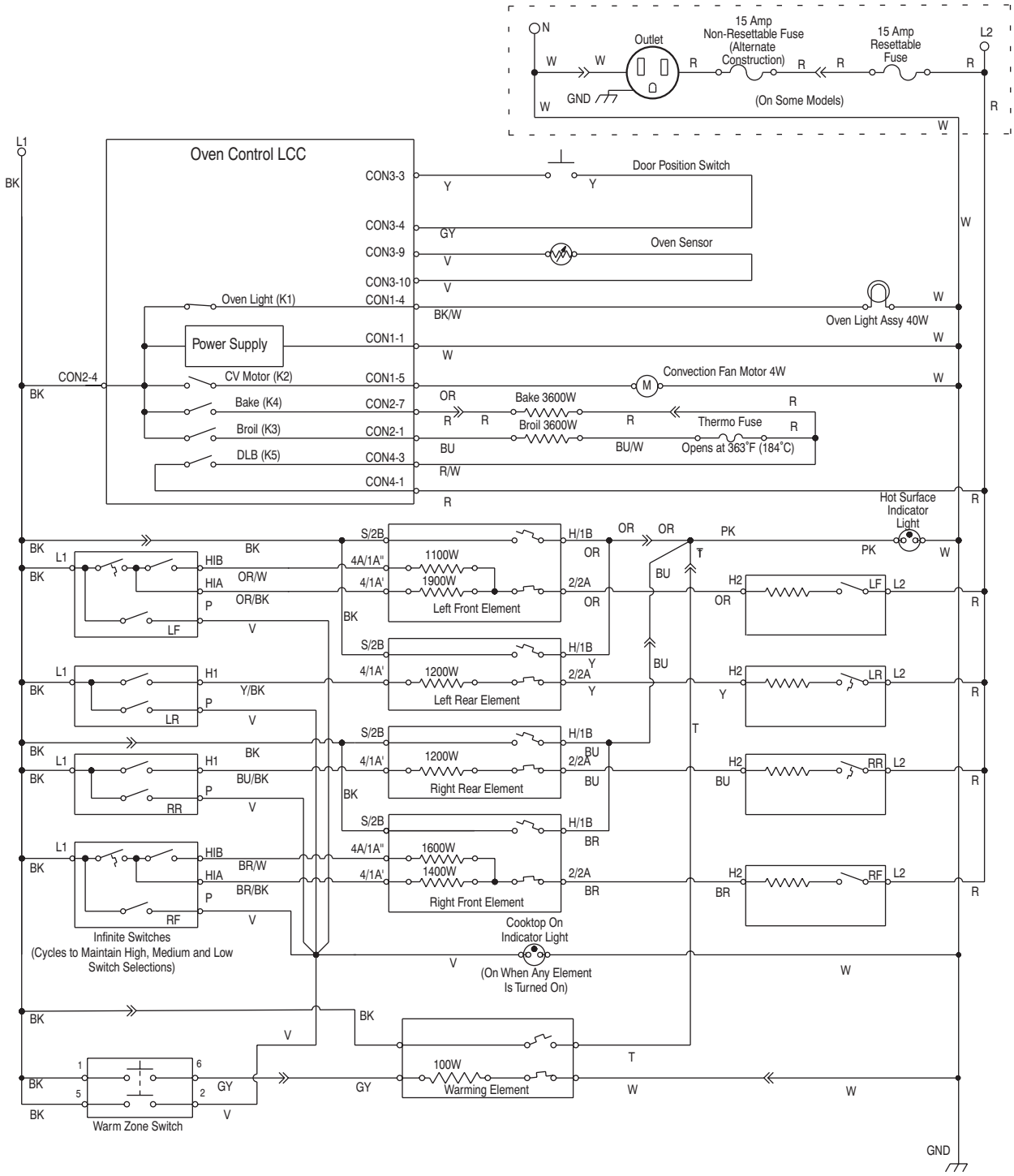

LEGEND

Component Terminals	Connection	No Connection	On Some Models	In Line Connection	CON1-2 = Connector 1 CON1 Position 2	Multiple Functions / Circuitry Enclosed Within

For Service Technician Use Only

Wiring diagram for models WFG540H0E

NOTE: Schematic shows door latch switch in the COOK position with oven door open and elements off.

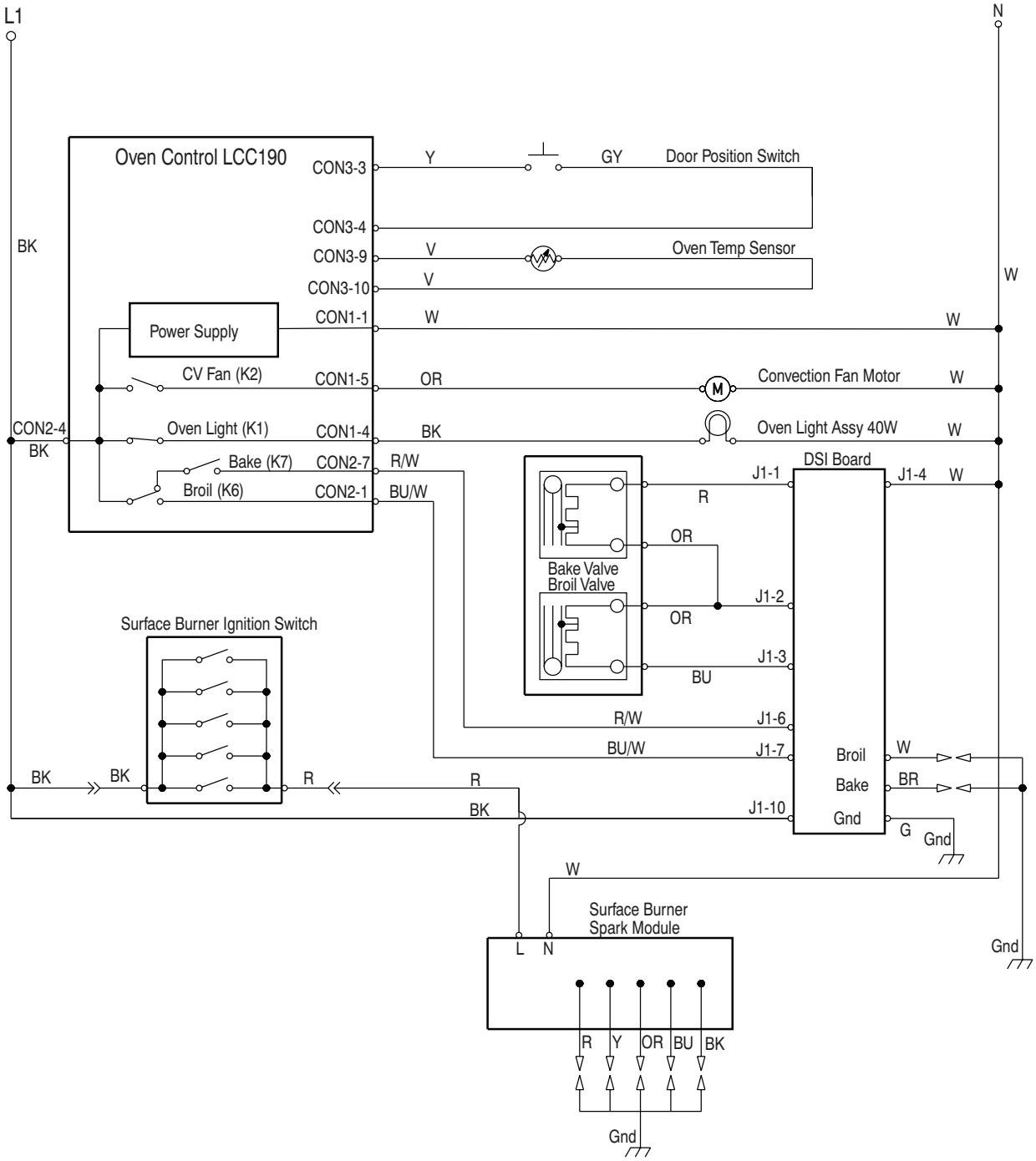

LEGEND

Component Terminals	Connection	No Connection	On Some Models	In Line Connection	CON1-2 = Connector 1 CON1 Position 2	Multiple Functions / Circuitry Enclosed Within

For Service Technician Use Only

Wiring diagram for models WFG745H0F and WFG770H0F

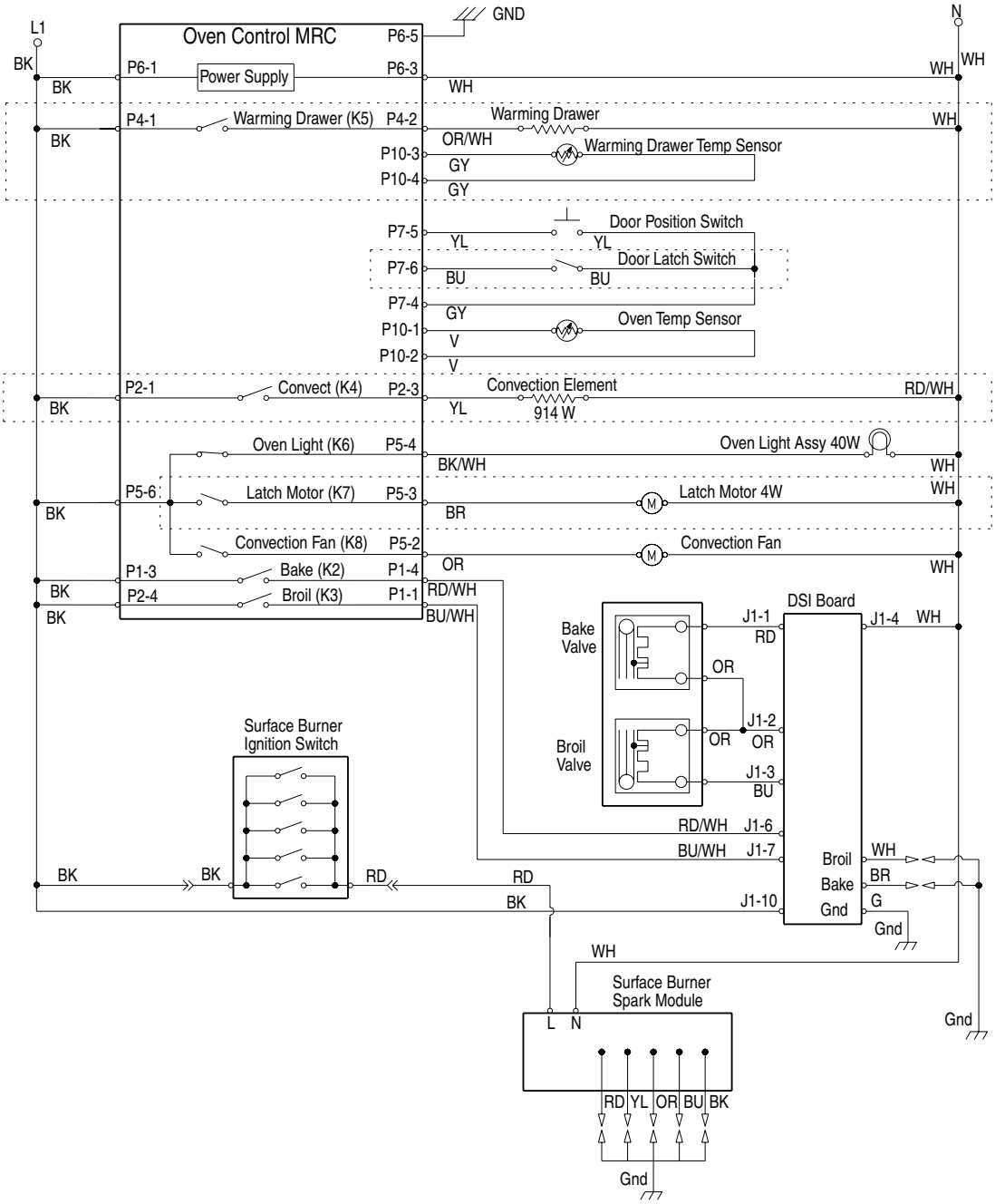

LEGEND

Component Terminals	Connection	No Connection	On Some Models	In-Line Connection	P1-2 = Connnector P1, Pin 2	Multiple Functions/Circuitry Enclosed Within

For Service Technician Use Only

Wiring diagram for models KFEG500E, YKFEG500E and YKFEG510E

NOTE: Schematic shows the oven door open and elements off.

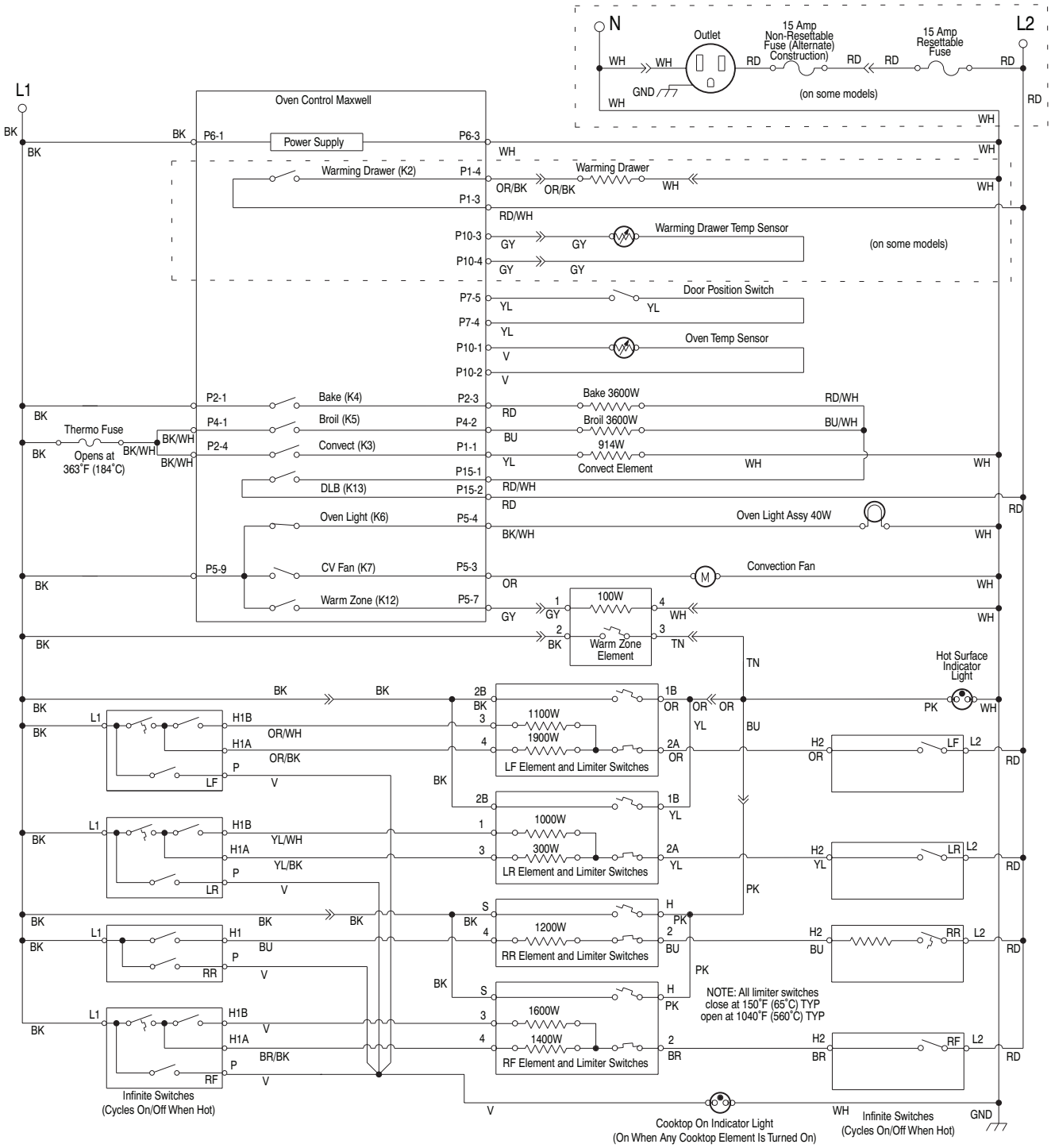

LEGEND

Component Terminals	Connection (Splice)	No Connection	On Some Models	In Line Connection	P1-2 = Connector P1 Position 2	Multiple Functions / Circuitry Enclosed Within

For Service Technician Use Only

Wiring diagram for models KFES530E and YKFES530E

NOTE: Schematic shows the oven door open and elements off.

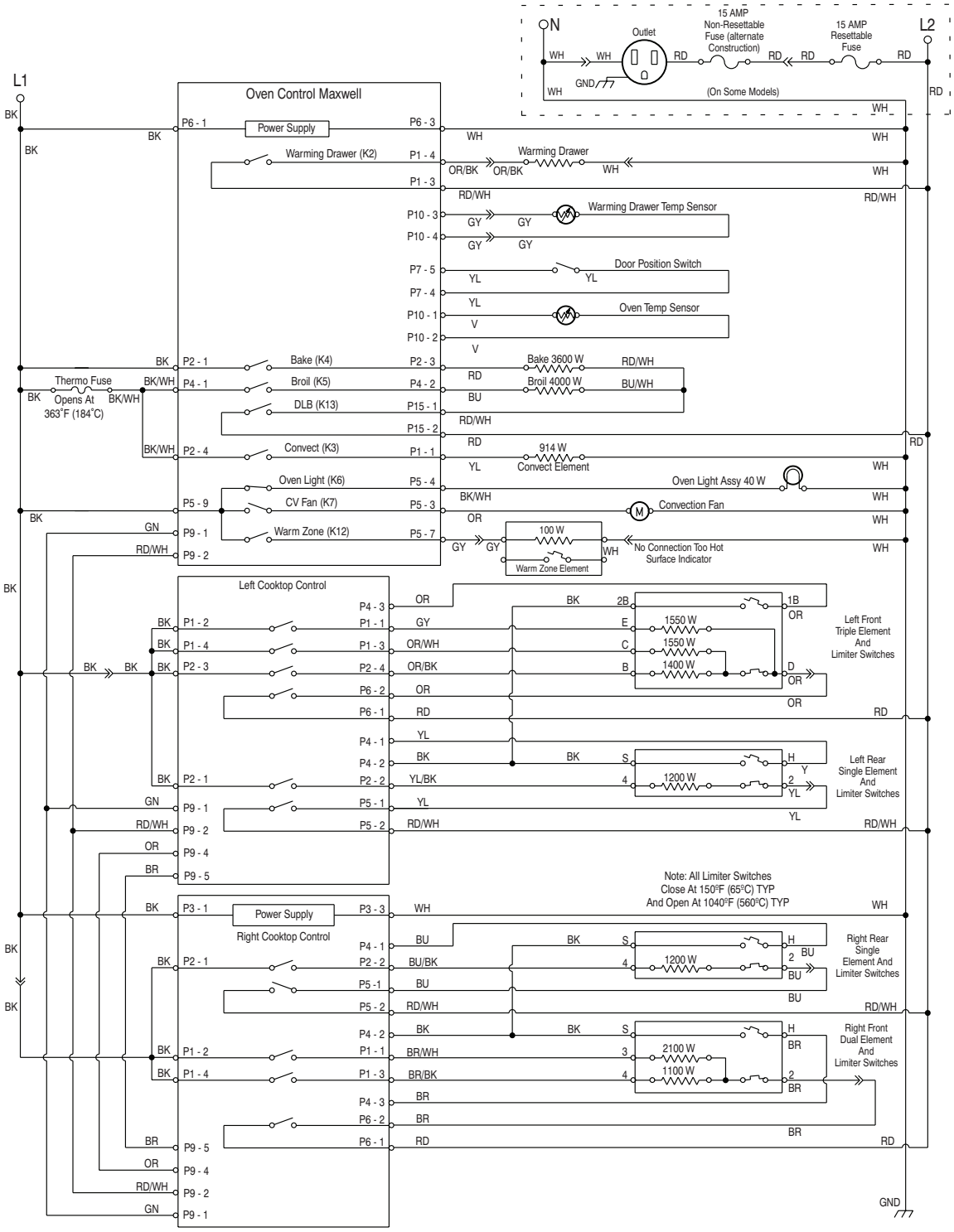

LEGEND

Component Terminals	Connection (Splice)	No Connection	On Some Models	In Line Connection	P1-2 = Connector P1 Position 2	Multiple Functions / Circuitry Enclosed Within

For Service Technician Use Only

Wiring diagram for model YMER8650F

NOTE: Schematic shows the oven door open and elements off.

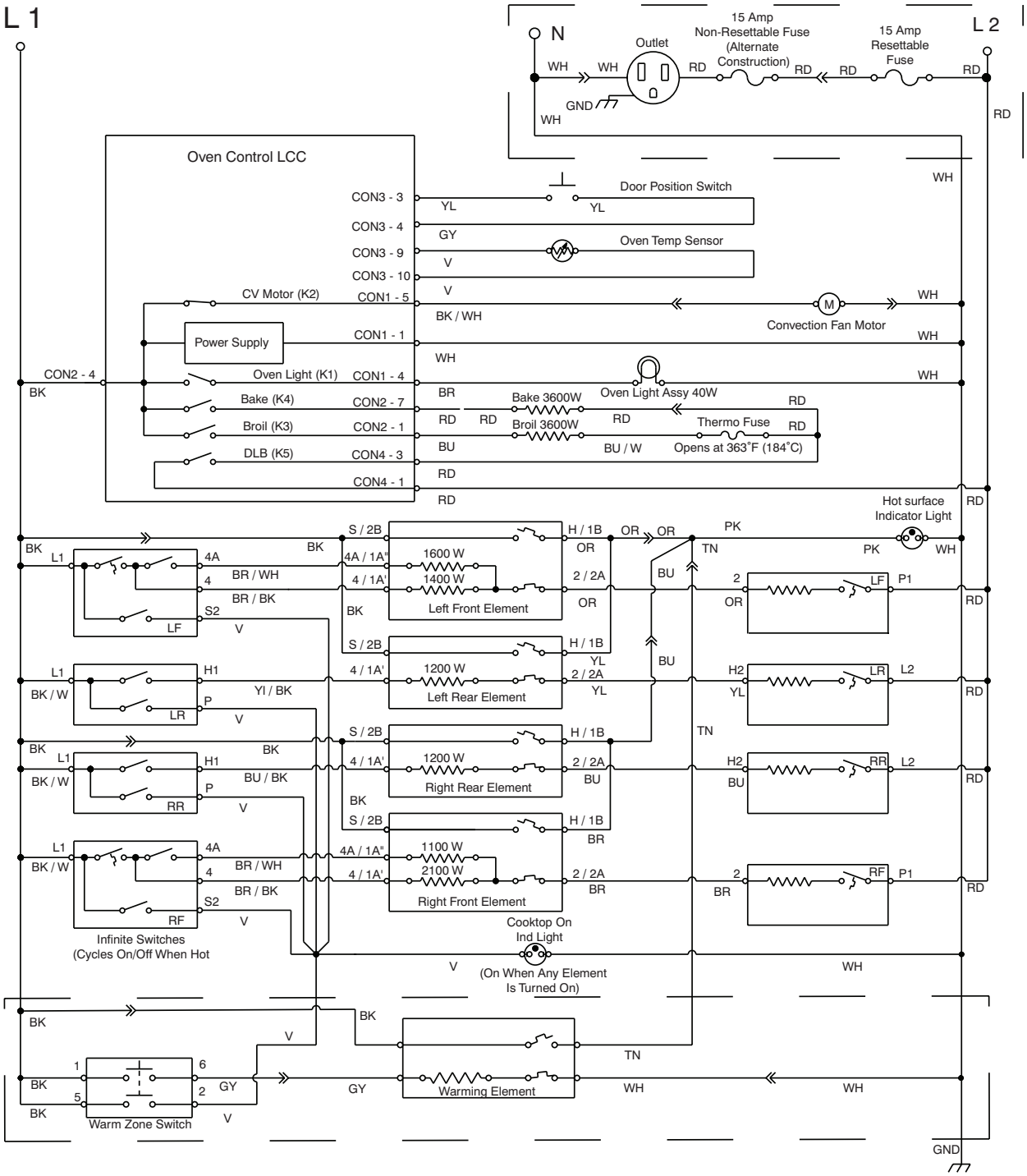

LEGEND

Component Terminals	Connection	No Connection	On Some Models	In Line Connection	CON1-2 = Connector 1 CON1 Position 2	Multiple Functions / Circuitry Enclosed Within

For Service Technician Use Only

Wiring diagram for models WFE745H0F, YWFE745H0F and WFE770H0F

NOTE: Schematic shows the oven door open and elements off.

Oven Control Wiring Diagram

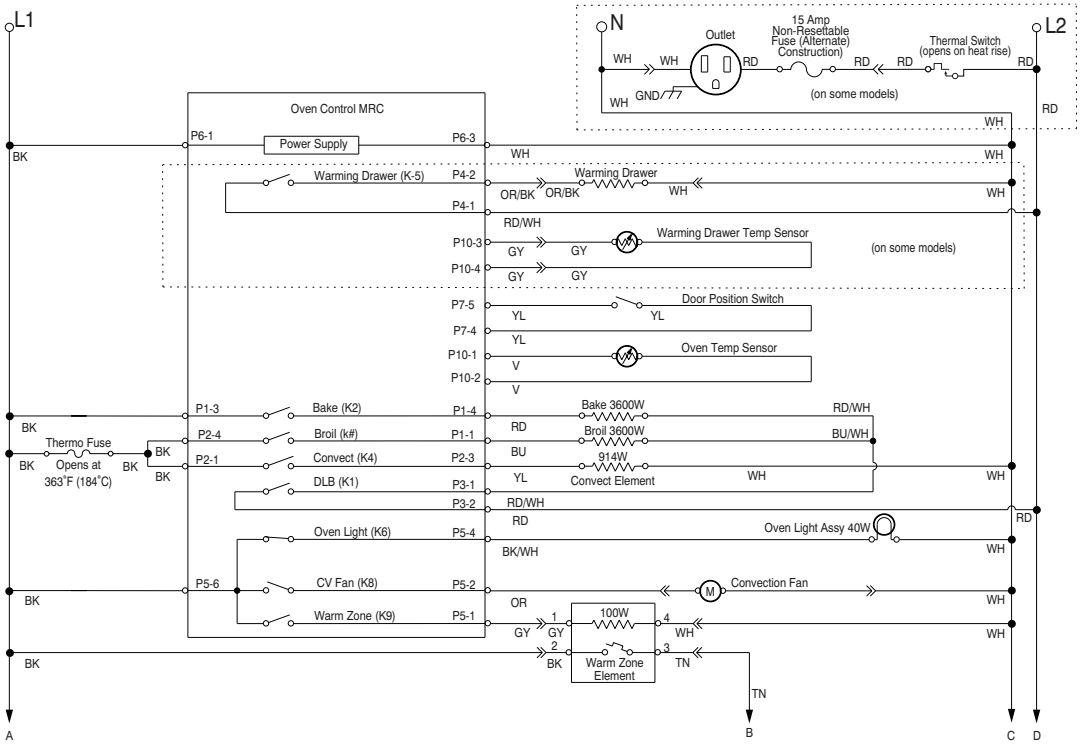

Cooktop Wiring Diagram

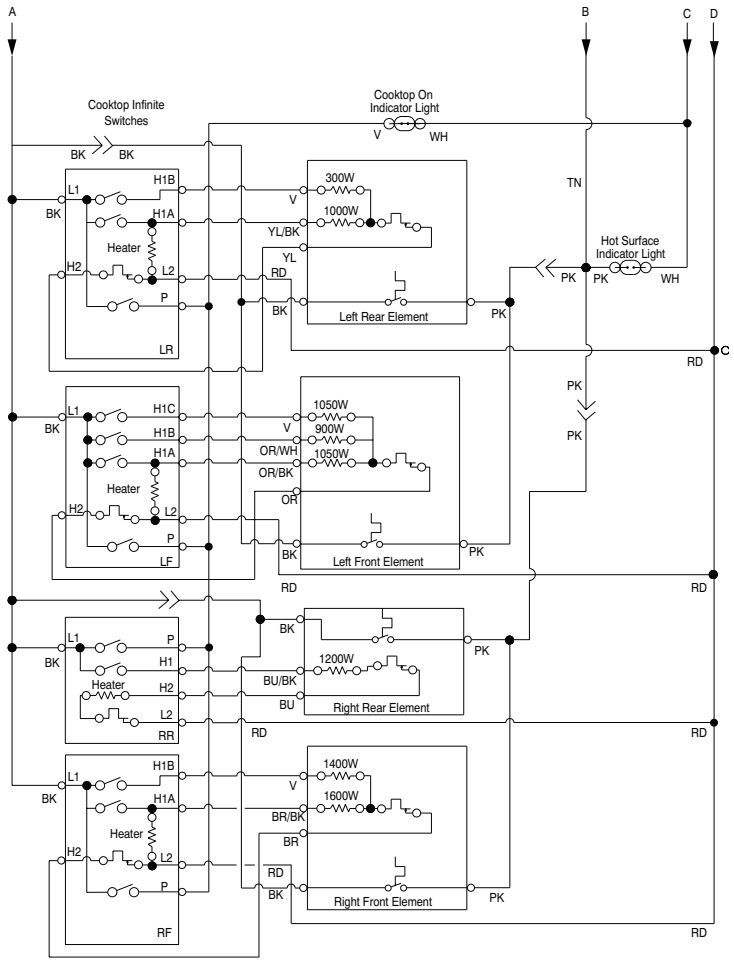

LEGEND

Connection	No Connection	On Some Models	In Line Connection	P2-1 Connector P2, Position 1	Circuitry Enclosed Within	Terminals	Single Switch	Thermal Switch (opens on heat rise)	Thermal Switch (closes on heat rise)	Resistor or Element	Motor	Incandescent Light	Non-resettable Fuse	Thermistor	Indicator Light	Triac

For Service Technician Use Only

Wiring diagram for model IGL730C

NOTE: Schematic shows the oven door open and elements off.

Oven Control Wiring Diagram

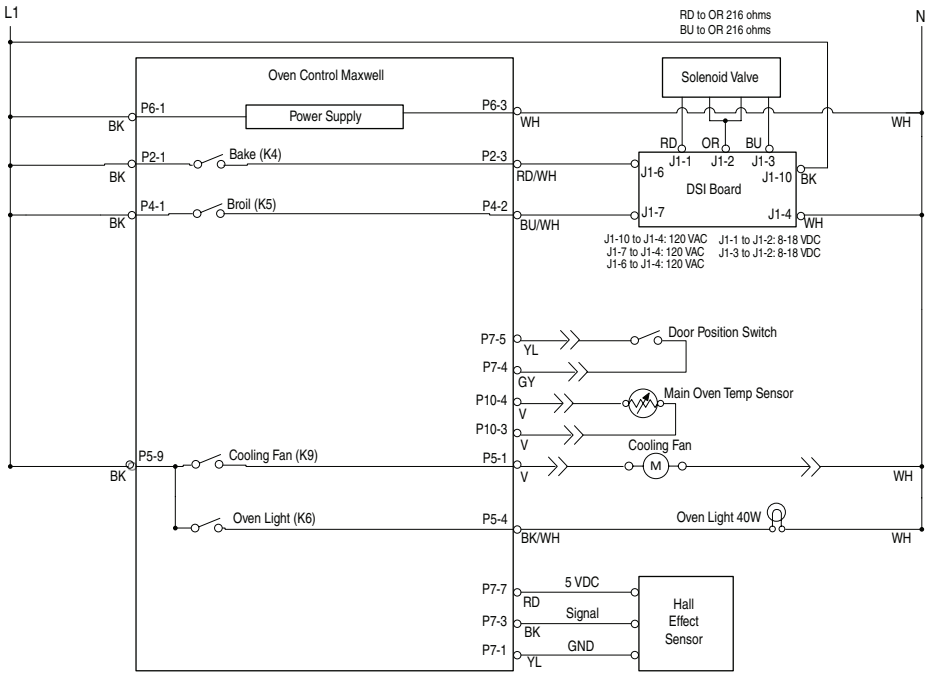

Cooktop Wiring Diagram

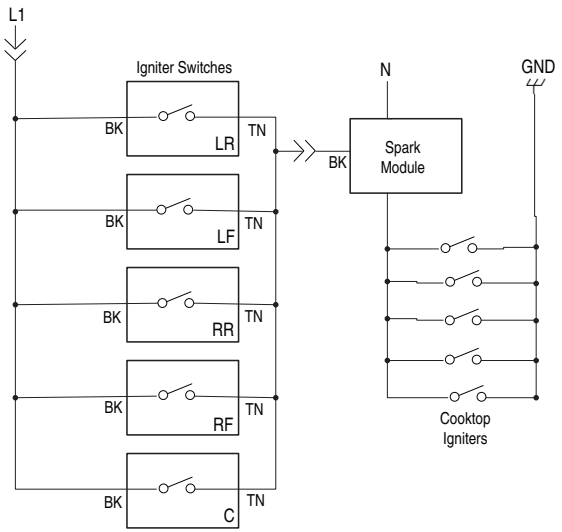

LEGEND

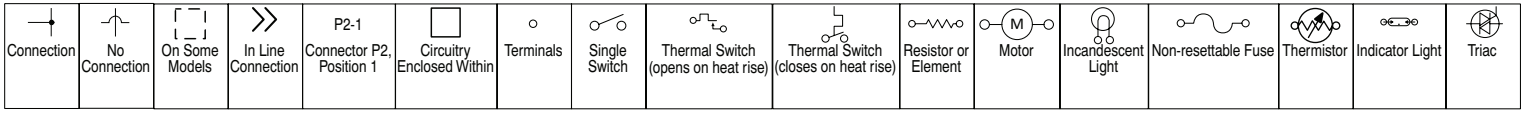

For Service Technician Use Only

Wiring diagram for model JDS1450F

NOTE: Schematic shows the oven door open and elements off.

Oven Control Wiring Diagram

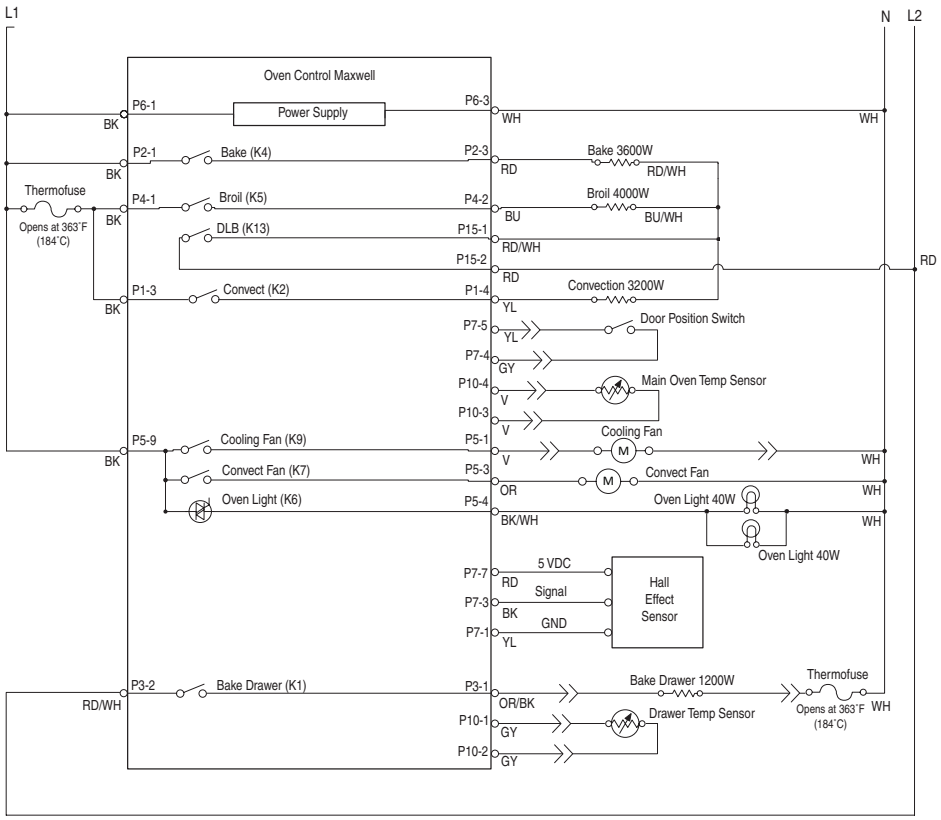

Cooktop Wiring Diagram

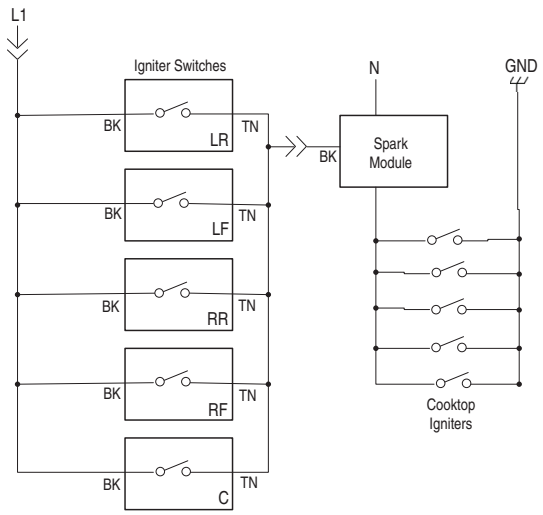

LEGEND

Connection	No Connection	On Some Models	In-Line Connection	P2-1 Connector P2, Position 1	Circuitry Enclosed Within	Terminals	Single Switch	Thermal Switch (opens on heat rise)	Thermal Switch (closes on heat rise)	Resistor or Element	Motor	Incandescent Light	Non-Resettable Fuse	Thermistor	Indicator Light	Triac	Thermo Fuse

For Service Technician Use Only

Wiring diagram for models JES1450CF and JES1450F

NOTE: Schematic shows the oven door open and elements off.

Oven Control Wiring Diagram

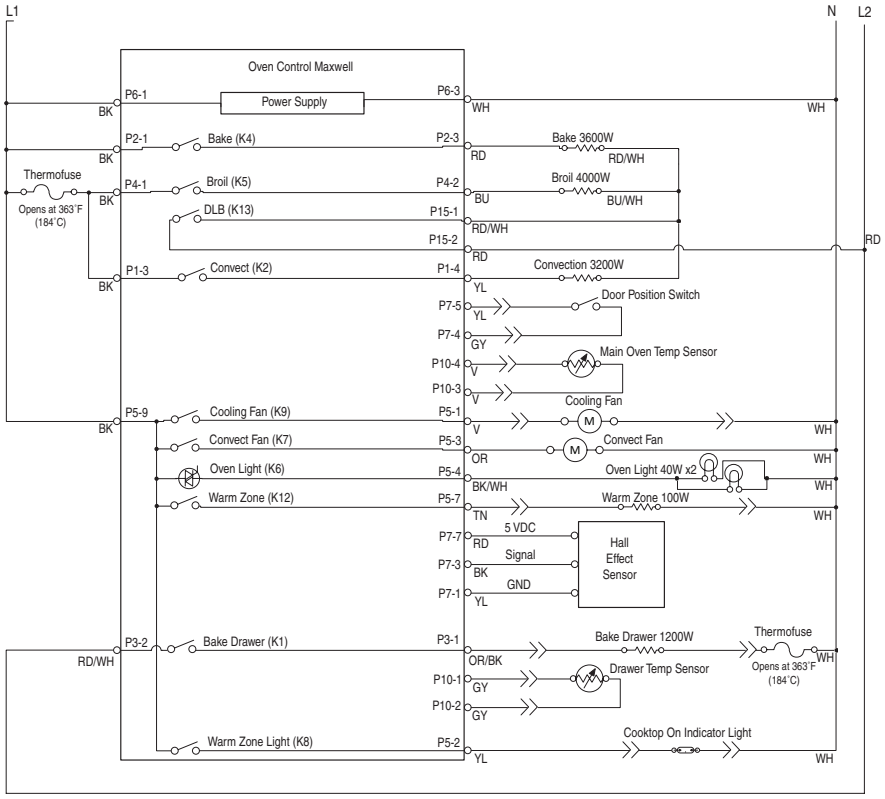

Cooktop Wiring Diagram

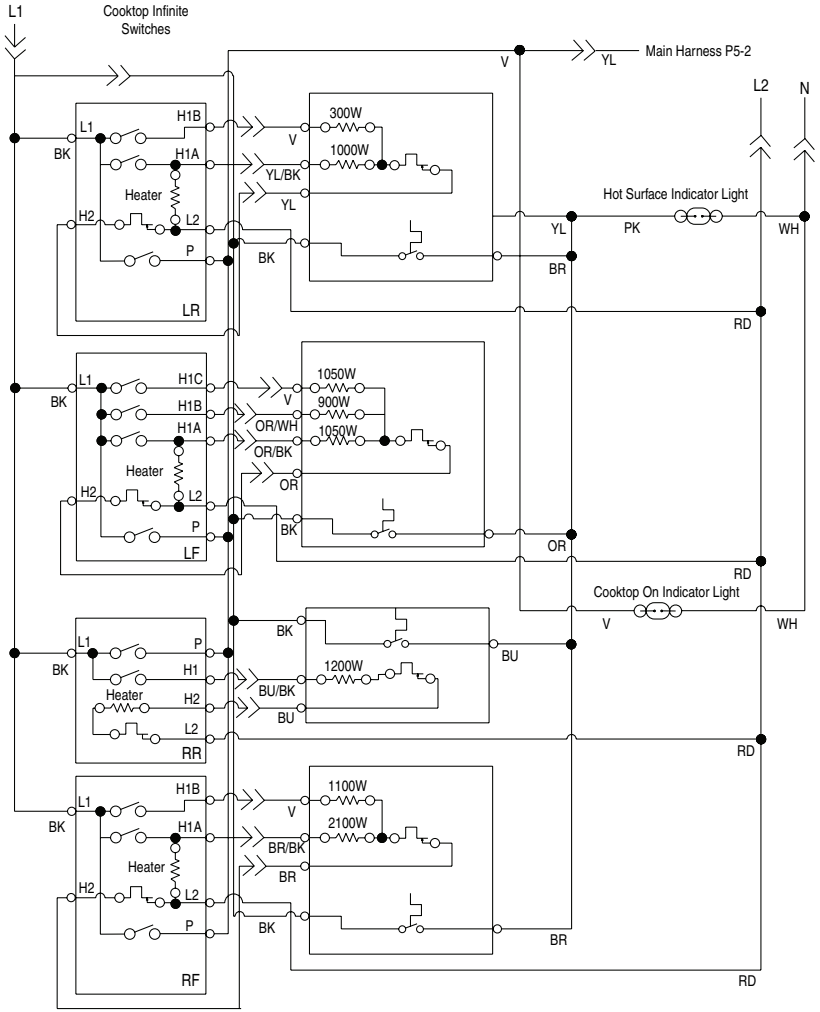

LEGEND

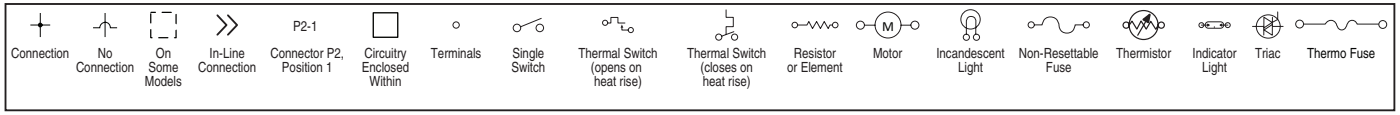

For Service Technician Use Only

Wiring diagram for model JGS1450F

NOTE: Schematic shows the oven door open and elements off.

Oven Control Wiring Diagram

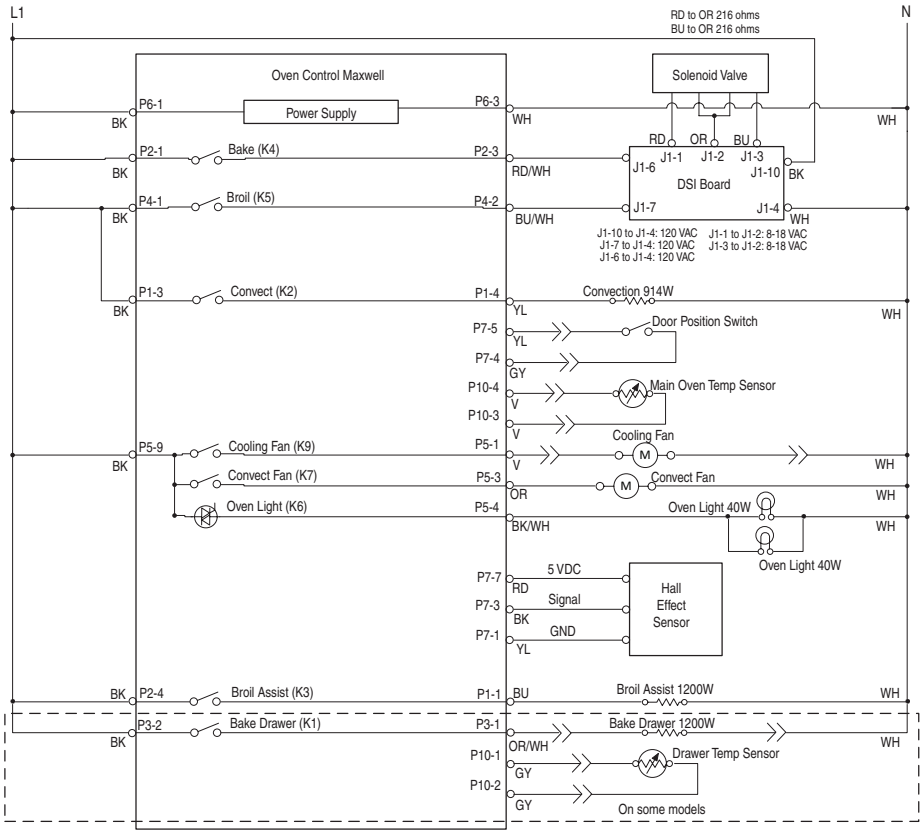

Cooktop Wiring Diagram

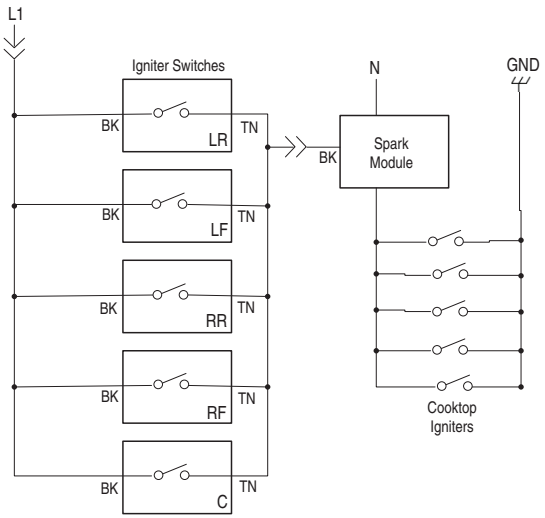

LEGEND

Connection	No Connection	On Some Models	In-Line Connection	P2-1 Connector P2, Position 1	Circuitry Enclosed Within	Terminals	Single Switch	Thermal Switch (opens on heat rise)	Thermal Switch (closes on heat rise)	Resistor or Element	Motor	Incandescent Light	Non-Resettable Fuse	Thermistor	Indicator Light	Triac	Thermo Fuse

For Service Technician Use Only

Wiring diagram for models JIS1450D and KSIB900E

NOTE: Schematic shows the oven door open and elements off.

Oven Control Wiring Diagram

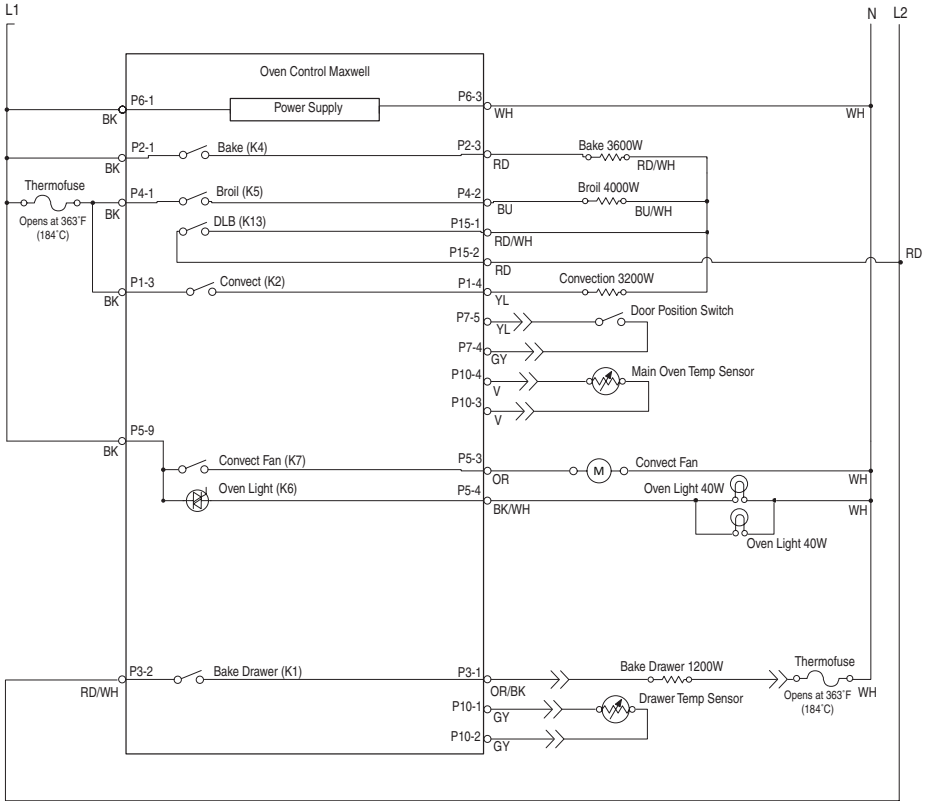

Cooktop Wiring Diagram

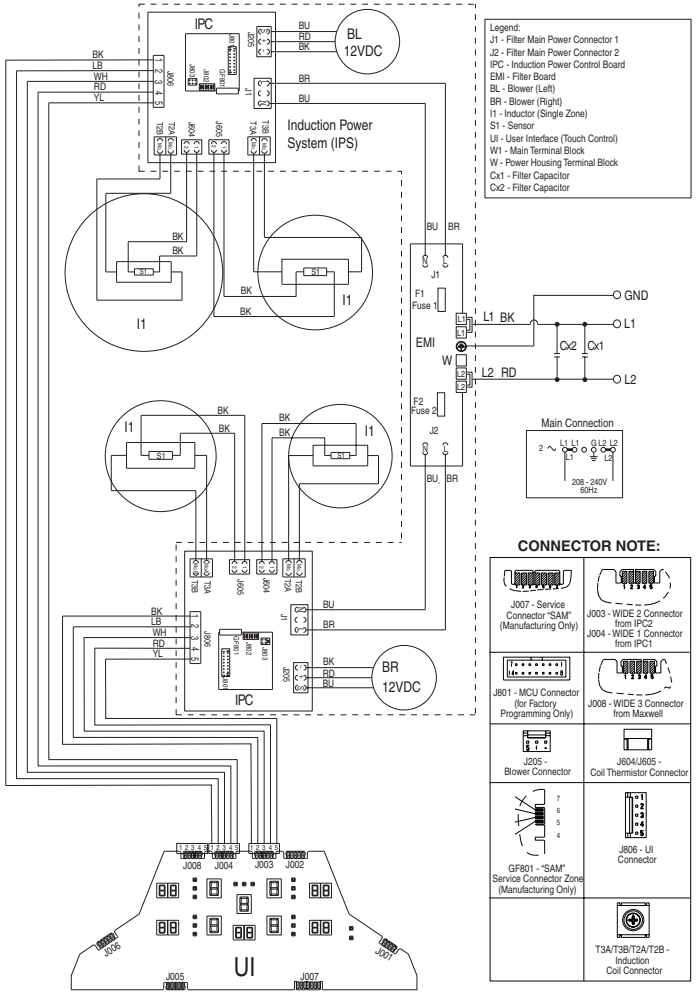

LEGEND

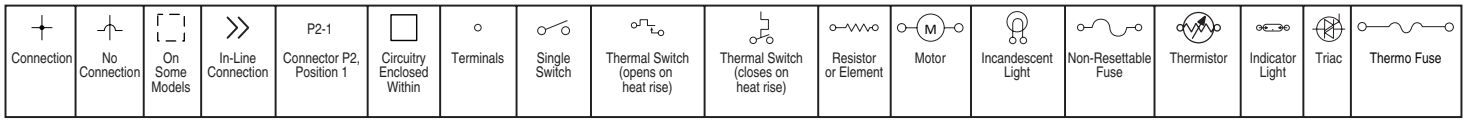

For Service Technician Use Only

Wiring diagram for model KSDB900E

NOTE: Schematic shows the oven door open and elements off.

Oven Control Wiring Diagram

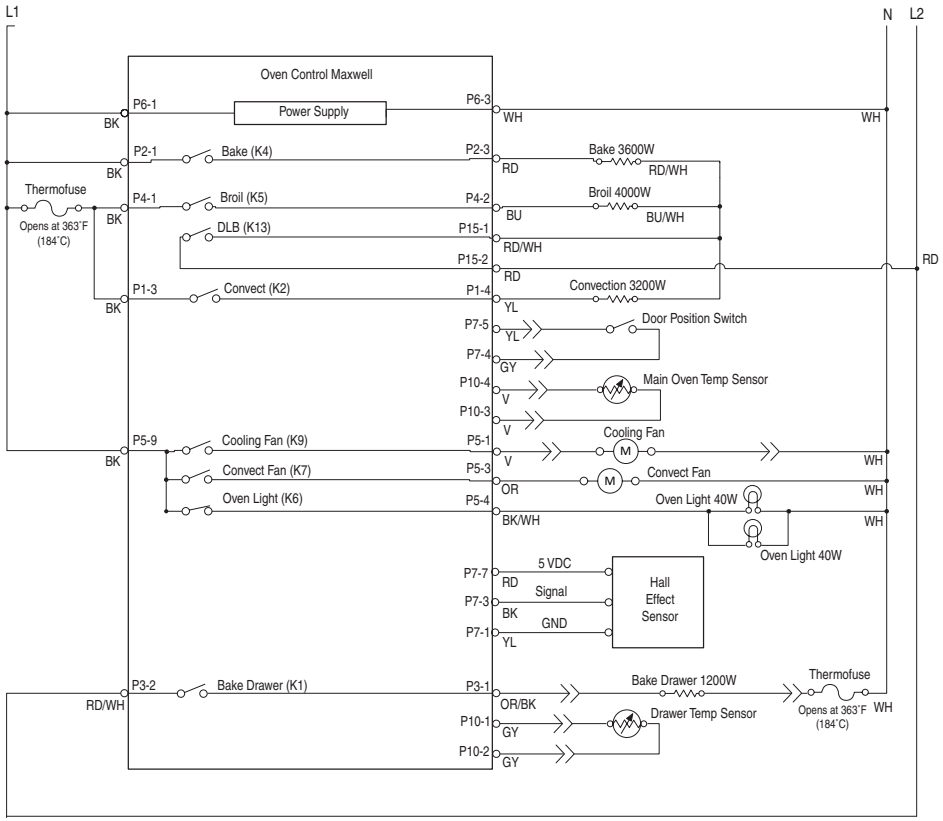

Cooktop Wiring Diagram

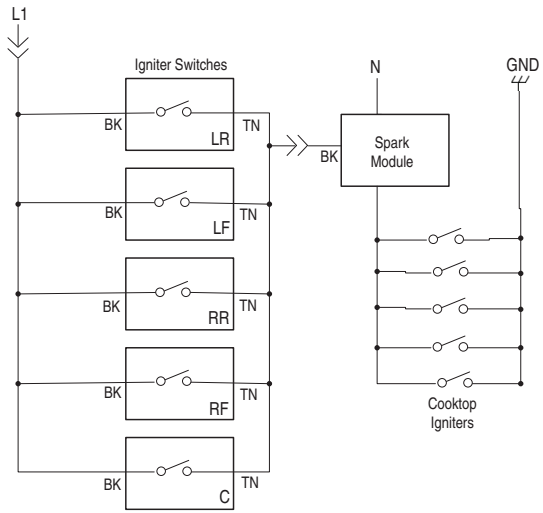

LEGEND

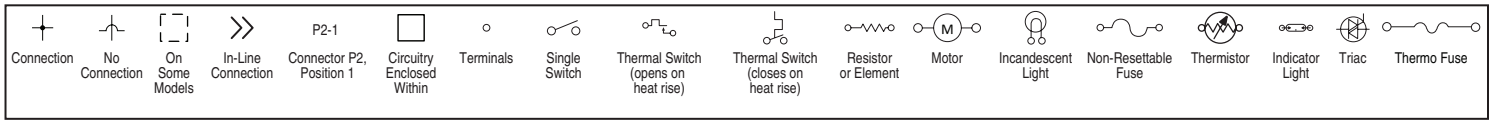

For Service Technician Use Only

Wiring diagram for model KSDG950E

NOTE: Schematic shows the oven door open and elements off.

Oven Control Wiring Diagram

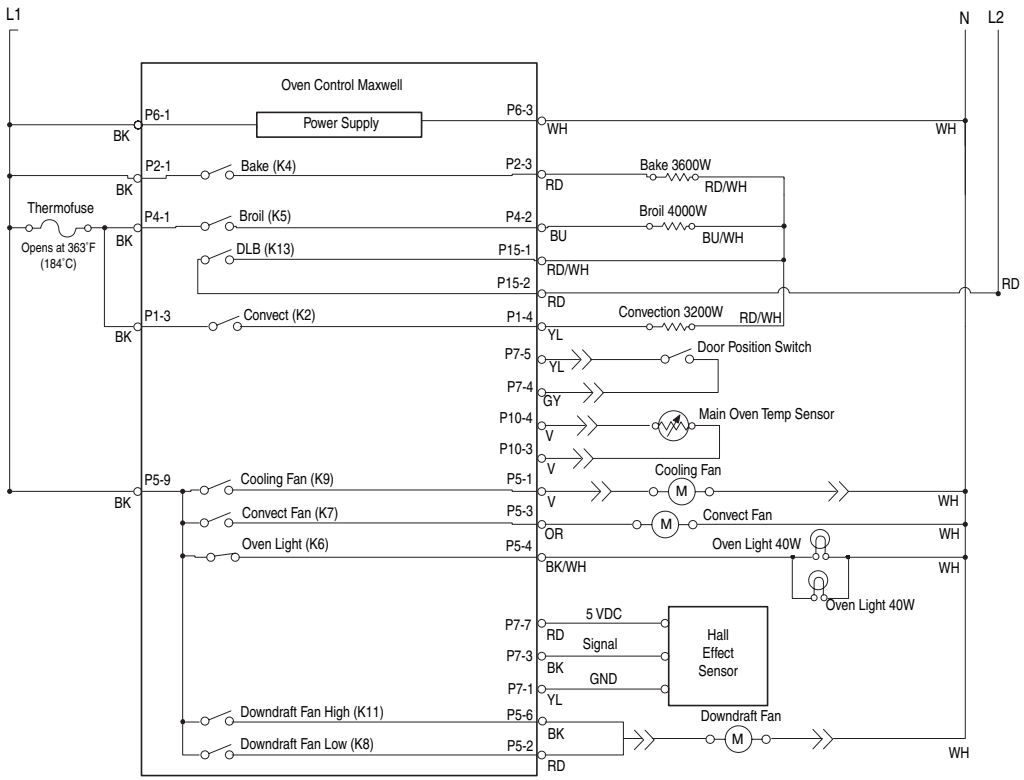

Cooktop Wiring Diagram

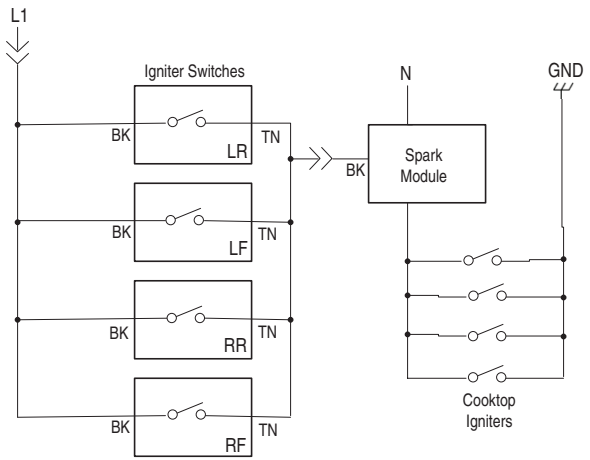

LEGEND

Connection	No Connection	On Some Models	In-Line Connection	P2-1 Connector P2, Position 1	Circuitry Enclosed Within	Terminals	Single Switch	Thermal Switch (opens on heat rise)	Thermal Switch (closes on heat rise)	Resistor or Element	Motor	Incandescent Light	Non-Resettable Fuse	Thermistor	Indicator Light	Triac	Thermo Fuse

For Service Technician Use Only

Wiring diagram for model KSEG700E

NOTE: Schematic shows the oven door open and elements off.

Oven Control Wiring Diagram

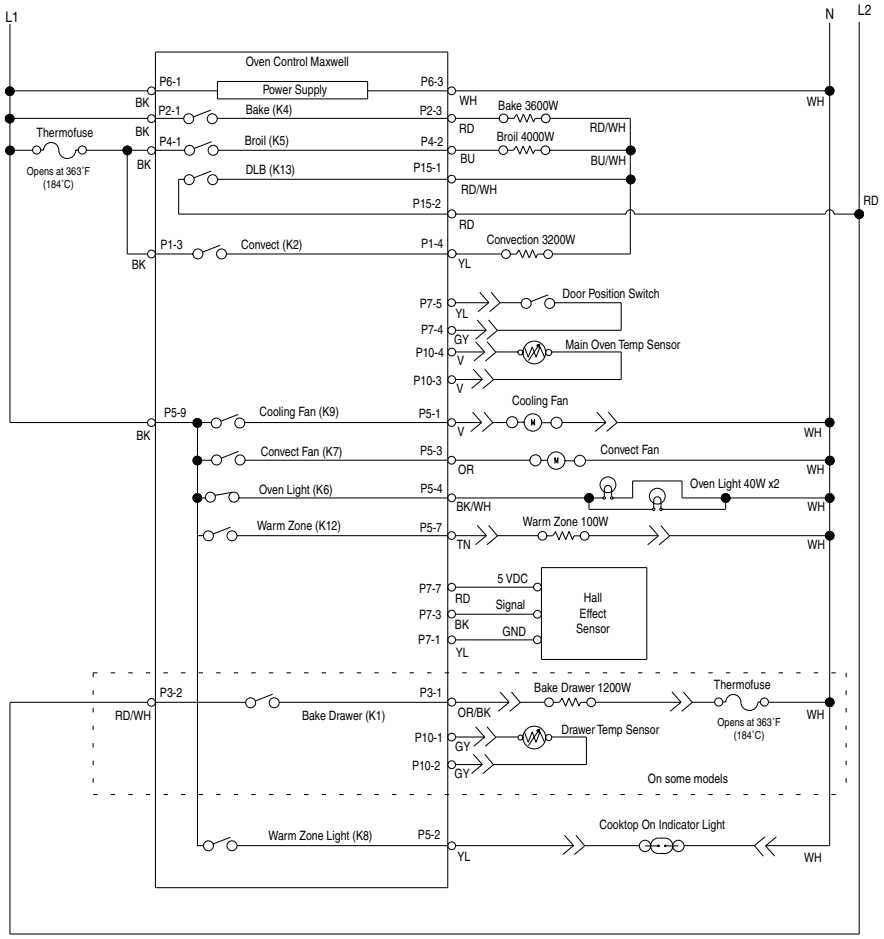

Cooktop Wiring Diagram

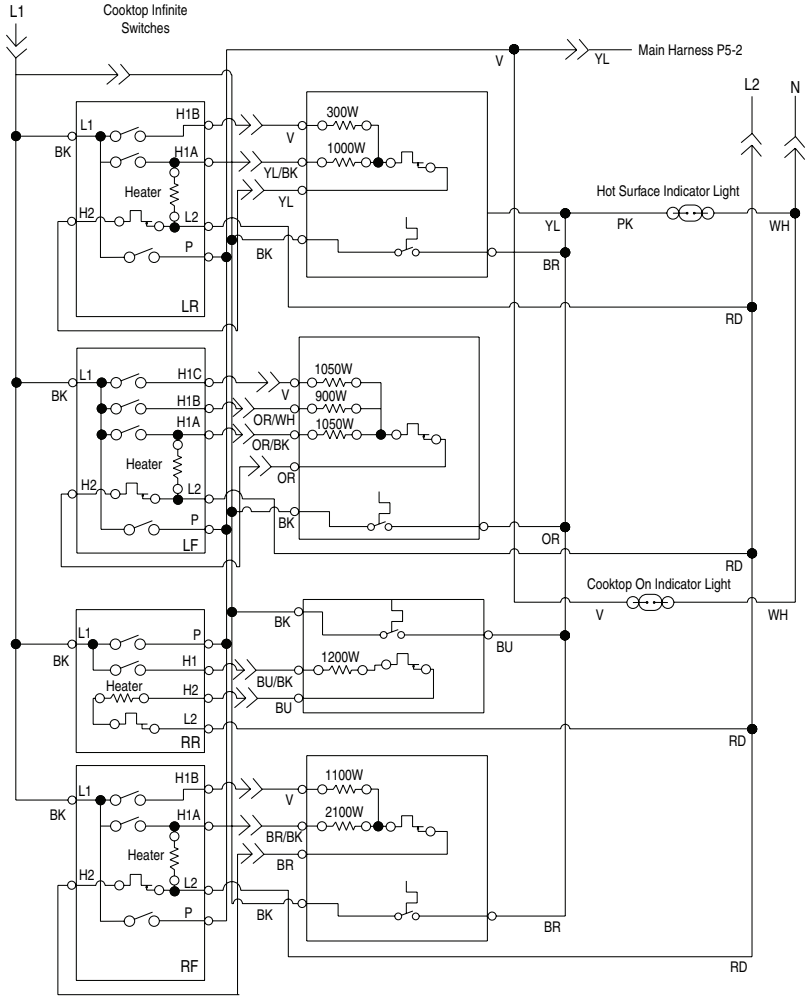

LEGEND

Connection	No Connection	On Some Models	In-Line Connection	P2-1 Connector P2, Position 1	Circuitry Enclosed Within	Terminals	Single Switch	Thermal Switch (opens on heat rise)	Thermal Switch (closes on heat rise)	Resistor or Element	Motor	Incandescent Light	Non-Resettable Fuse	Thermistor	Indicator Light	Triac	Thermo Fuse

For Service Technician Use Only

Wiring diagram for model KSEG950E

NOTE: Schematic shows the oven door open and elements off.

Oven Control Wiring Diagram

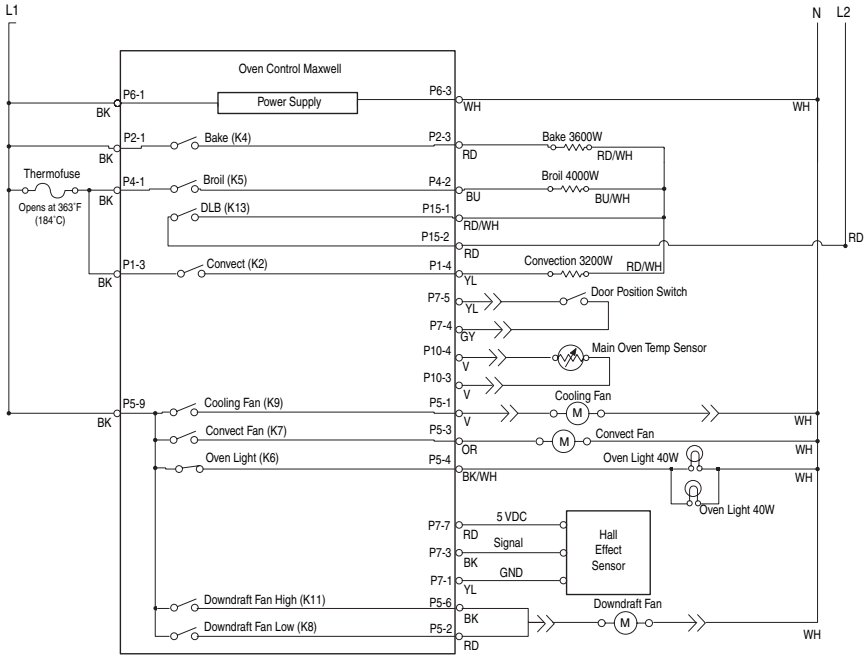

Cooktop Wiring Diagram

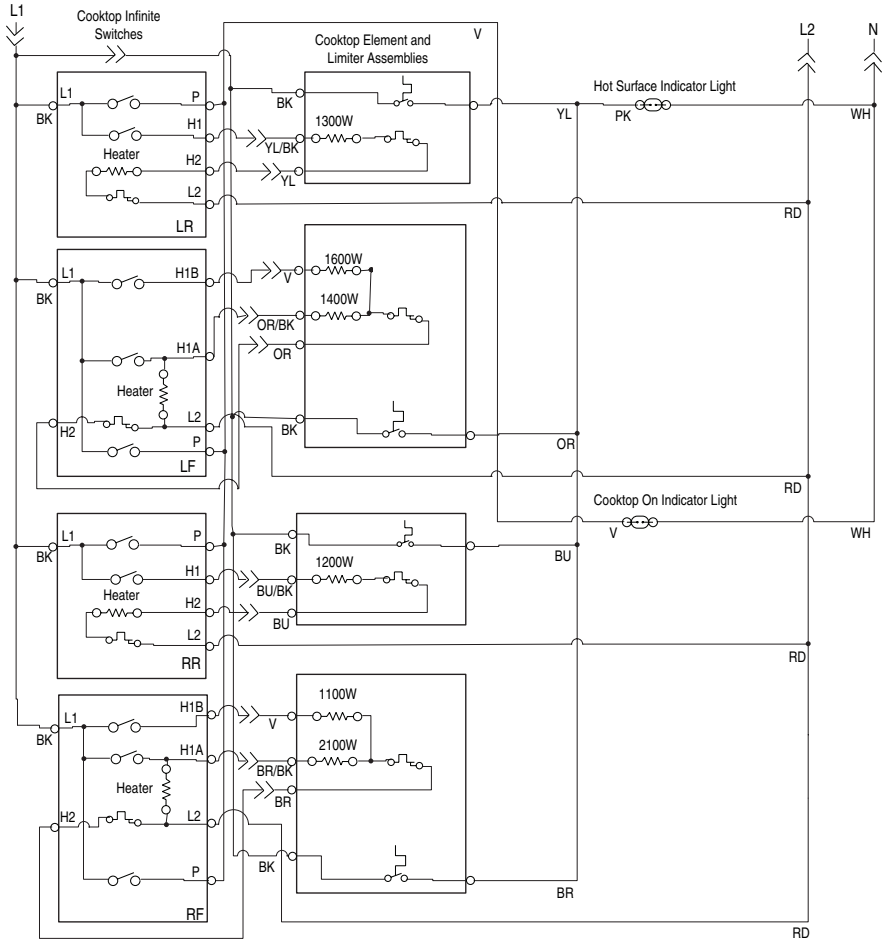

LEGEND

Connection	No Connection	On Some Models	In-Line Connection	P2-1 Connector P2, Position 1	Circuitry Enclosed Within	Terminals	Single Switch	Thermal Switch (opens on heat rise)	Thermal Switch (closes on heat rise)	Resistor or Element	Motor	Incandescent Light	Non-Resettable Fuse	Thermistor	Indicator Light	Triac	Thermo Fuse

For Service Technician Use Only

Wiring diagram for models KSGB900E and KSGG700E

NOTE: Schematic shows the oven door open and elements off.

Oven Control Wiring Diagram

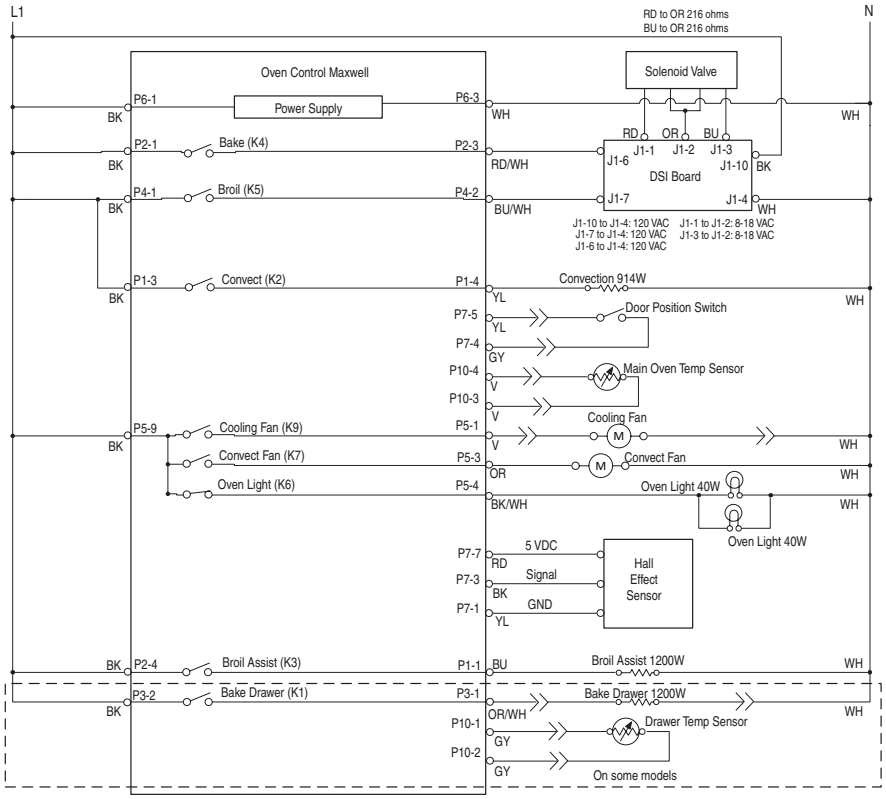

Cooktop Wiring Diagram

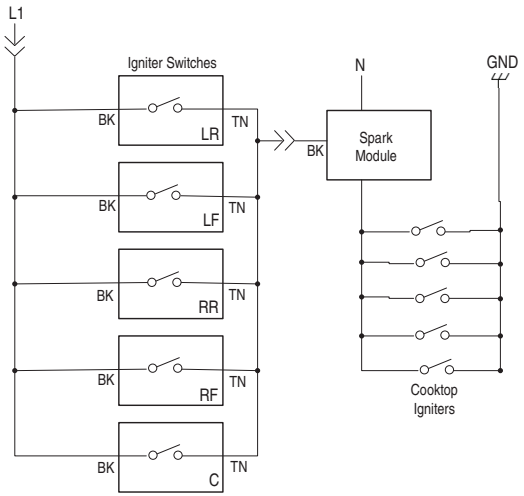

LEGEND

Connection	No Connection	On Some Models	In-Line Connection	P2-1 Connector P2, Position 1	Circuitry Enclosed Within	Terminals	Single Switch	Thermal Switch (opens on heat rise)	Thermal Switch (closes on heat rise)	Resistor or Element	Motor	Incandescent Light	Non-Resettable Fuse	Thermistor	Indicator Light	Triac	Thermo Fuse

For Service Technician Use Only

Wiring diagram for model MGS8800F

NOTE: Schematic shows the oven door open and elements off.

Oven Control Wiring Diagram

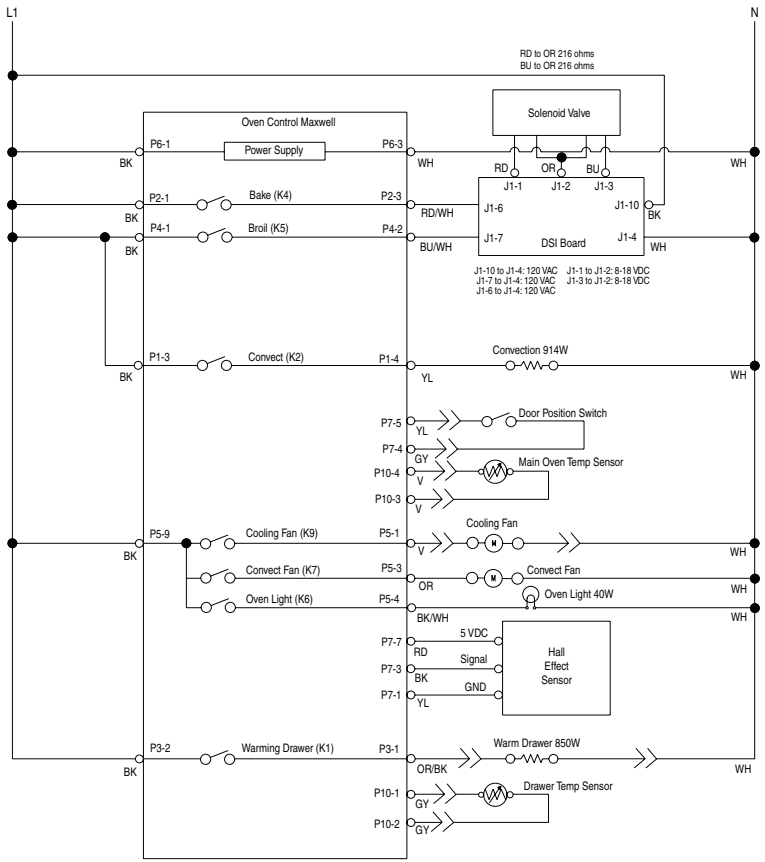

Cooktop Wiring Diagram

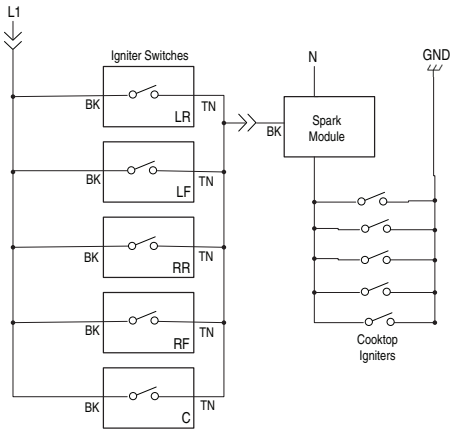

LEGEND

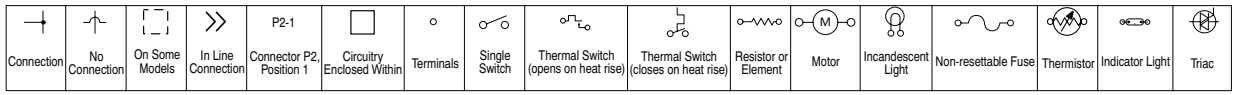

For Service Technician Use Only

Wiring diagram for model WEE745H0F

NOTE: Schematic shows the oven door open and elements off.

Oven Control Wiring Diagram

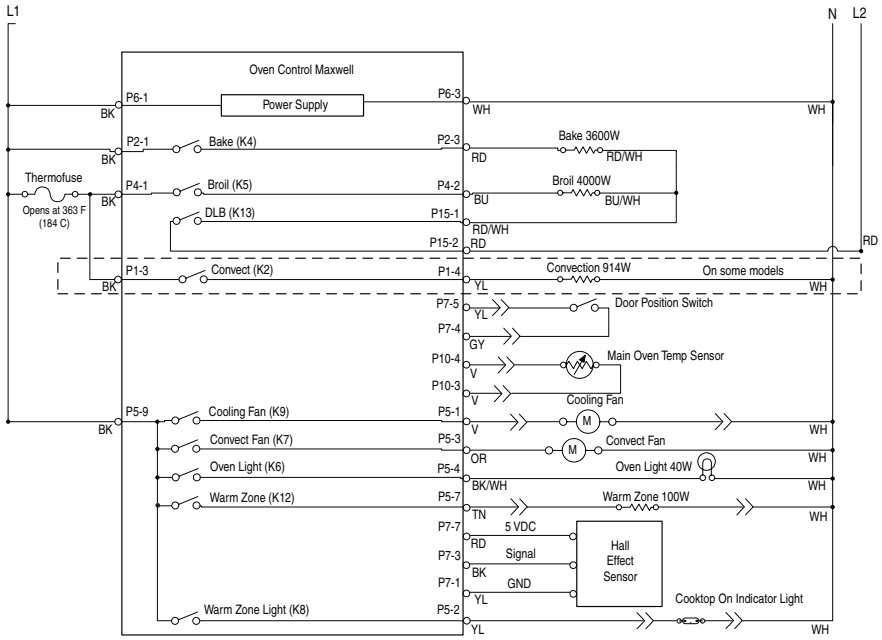

Cooktop Wiring Diagram

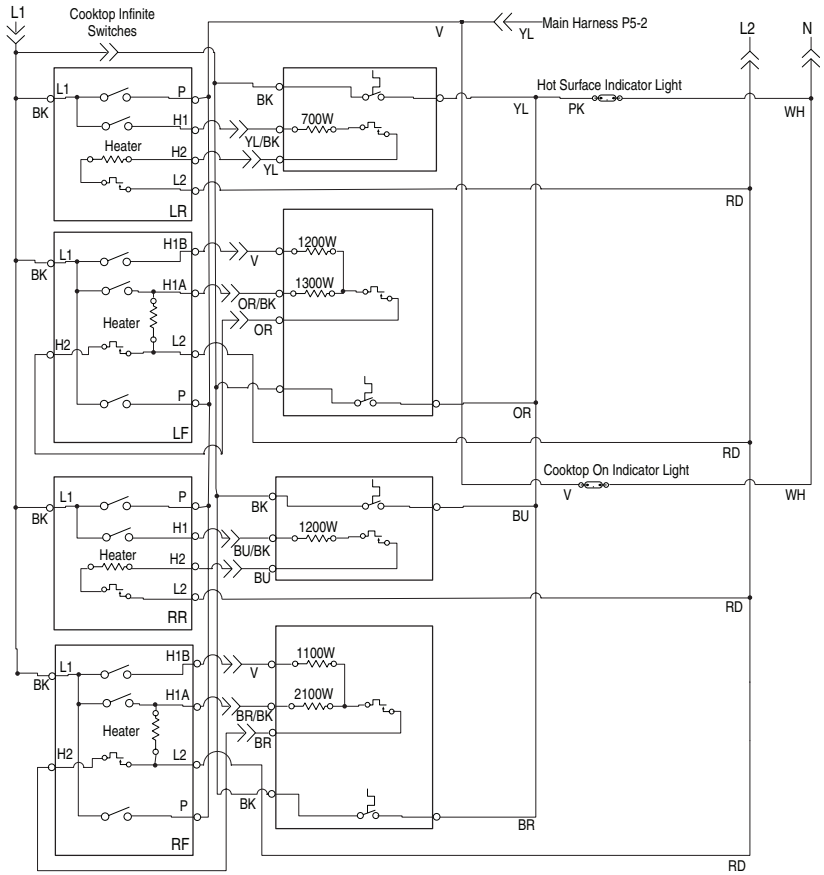

LEGEND

Connection	No Connection	On Some Models	In Line Connection	P2-1 Connector P2, Position 1	Circuitry Enclosed Within	Terminals	Single Switch	Thermal Switch (opens on heat rise)	Thermal Switch (closes on heat rise)	Resistor or Element	Motor	Incandescent Light	Non-resettable Fuse	Thermistor	Indicator Light	Triac

For Service Technician Use Only

Wiring diagram for model WEG745H0F

NOTE: Schematic shows the oven door open and elements off.

Control Wiring Diagram

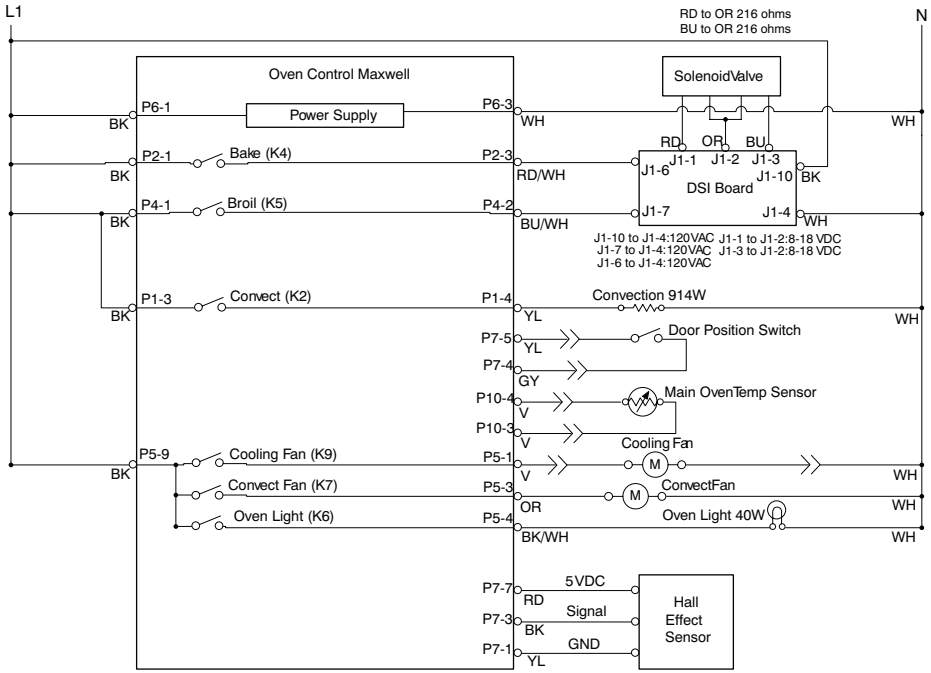

Cooktop Wiring Diagram

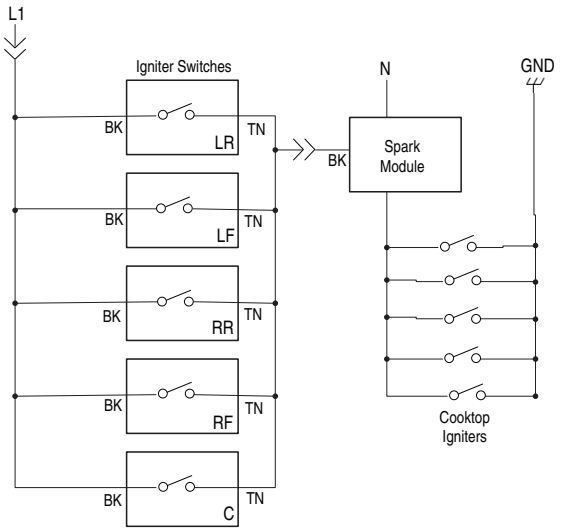

LEGEND

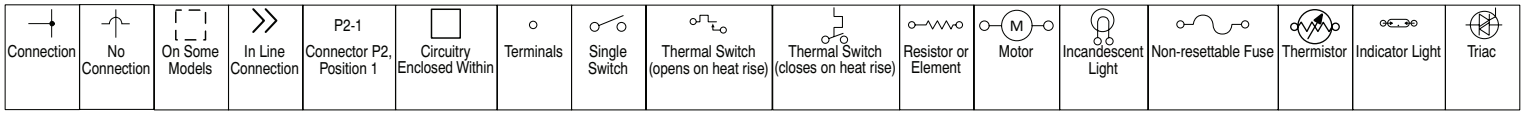

For Service Technician Use Only

Wiring diagram for models IEL730C and YIEL730C

NOTE: Schematic shows the oven door open and elements off.

Oven Control Wiring Diagram

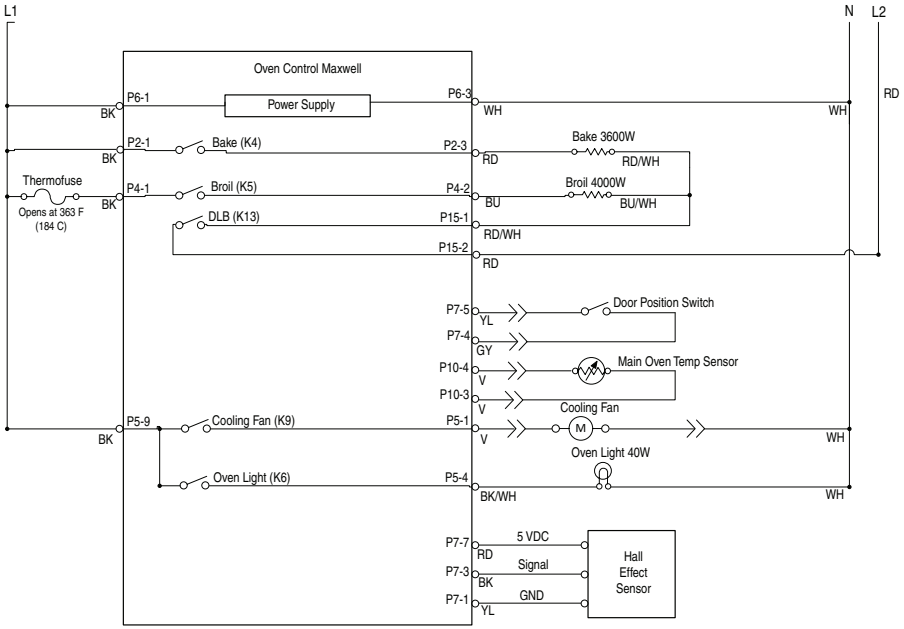

Cooktop Wiring Diagram

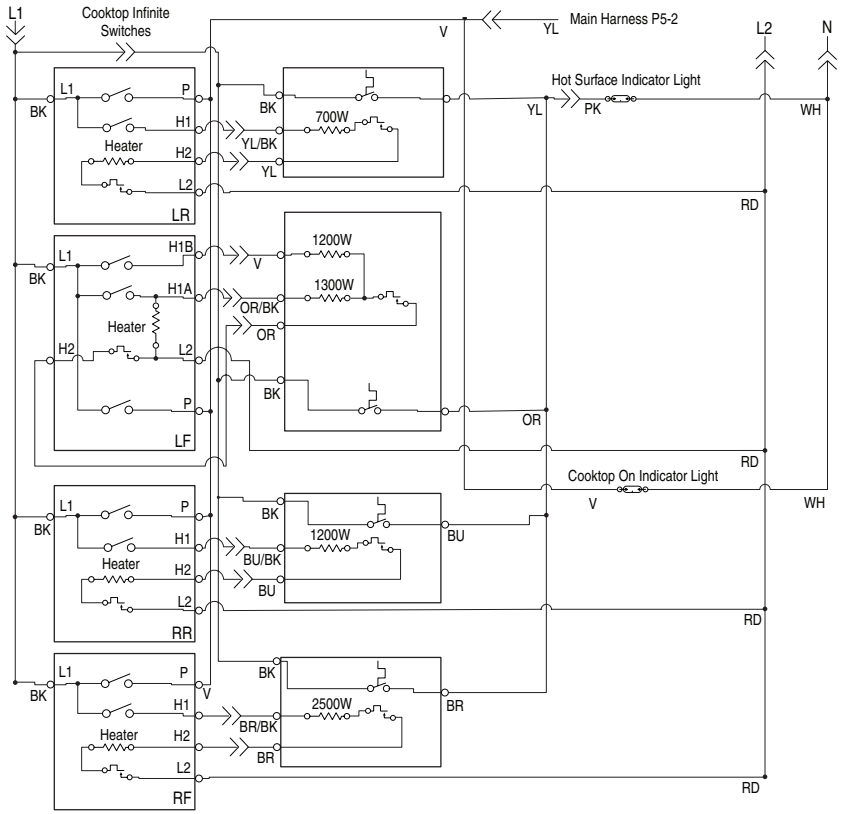

LEGEND

Connection	No Connection	On Some Models	In Line Connection	P2-1 Connector P2, Position 1	Circuitry Enclosed Within	Terminals	Single Switch	Thermal Switch (opens on heat rise)	Thermal Switch (closes on heat rise)	Resistor or Element	Motor	Incandescent Light	Non-resettable Fuse	Thermistor	Indicator Light	Triac

For Service Technician Use Only

Wiring diagram for model YKSDB900E

NOTE: Schematic shows the oven door open and elements off.

Oven Control Wiring Diagram

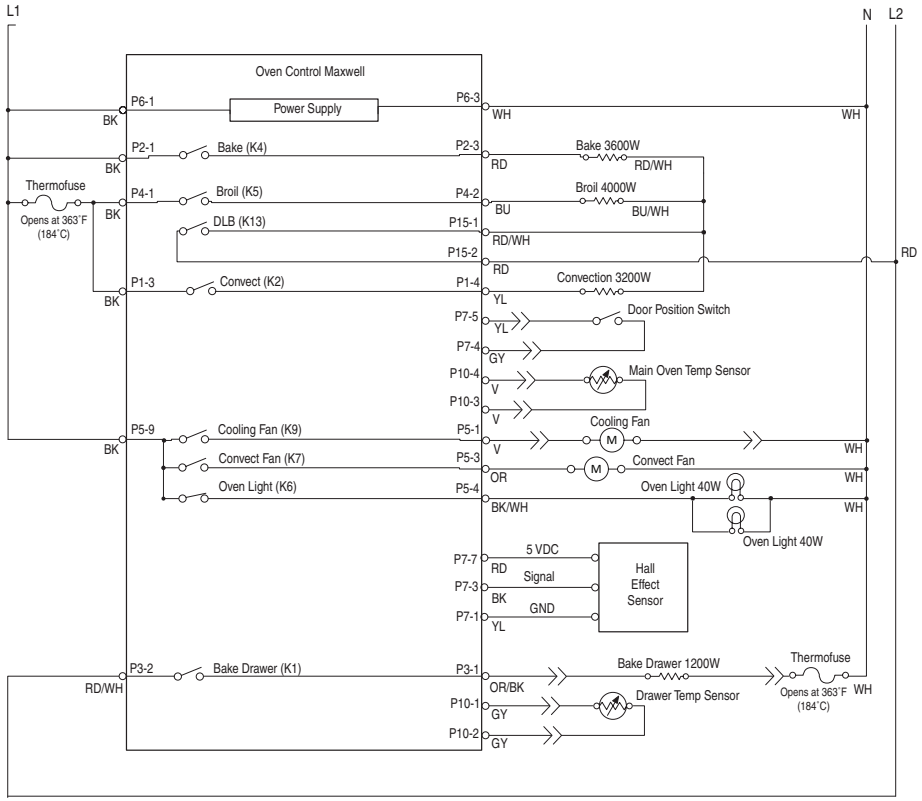

Cooktop Wiring Diagram

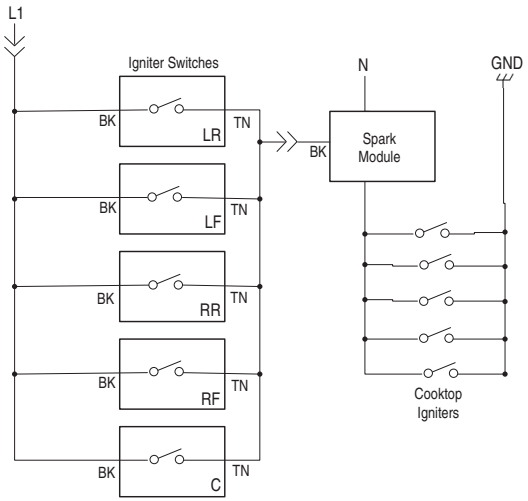

LEGEND

Connection	No Connection	On Some Models	In-Line Connection	P2-1 Connector P2, Position 1	Circuitry Enclosed Within	Terminals	Single Switch	Thermal Switch (opens on heat rise)	Thermal Switch (closes on heat rise)	Resistor or Element	Motor	Incandescent Light	Non-Resettable Fuse	Thermistor	Indicator Light	Triac	Thermo Fuse

For Service Technician Use Only

Wiring diagram for models KSEB900E, YKSEB900E and YKSEG700E

NOTE: Schematic shows the oven door open and elements off.

Oven Control Wiring Diagram

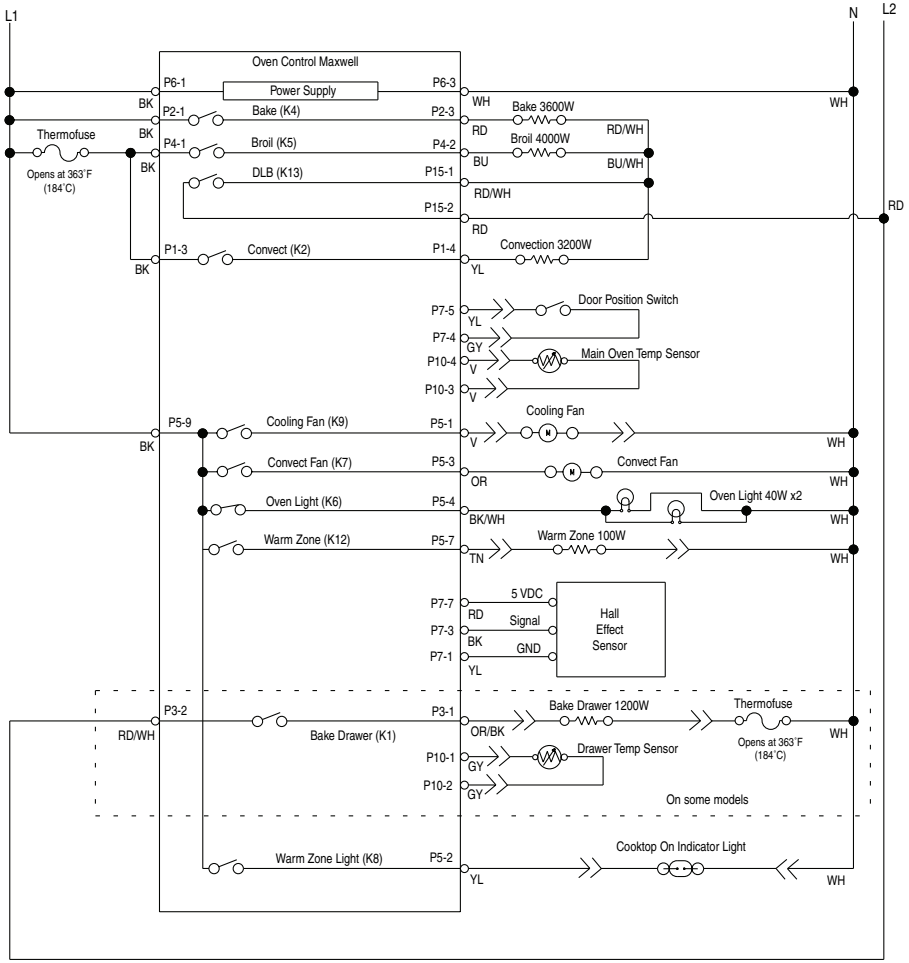

Cooktop Wiring Diagram

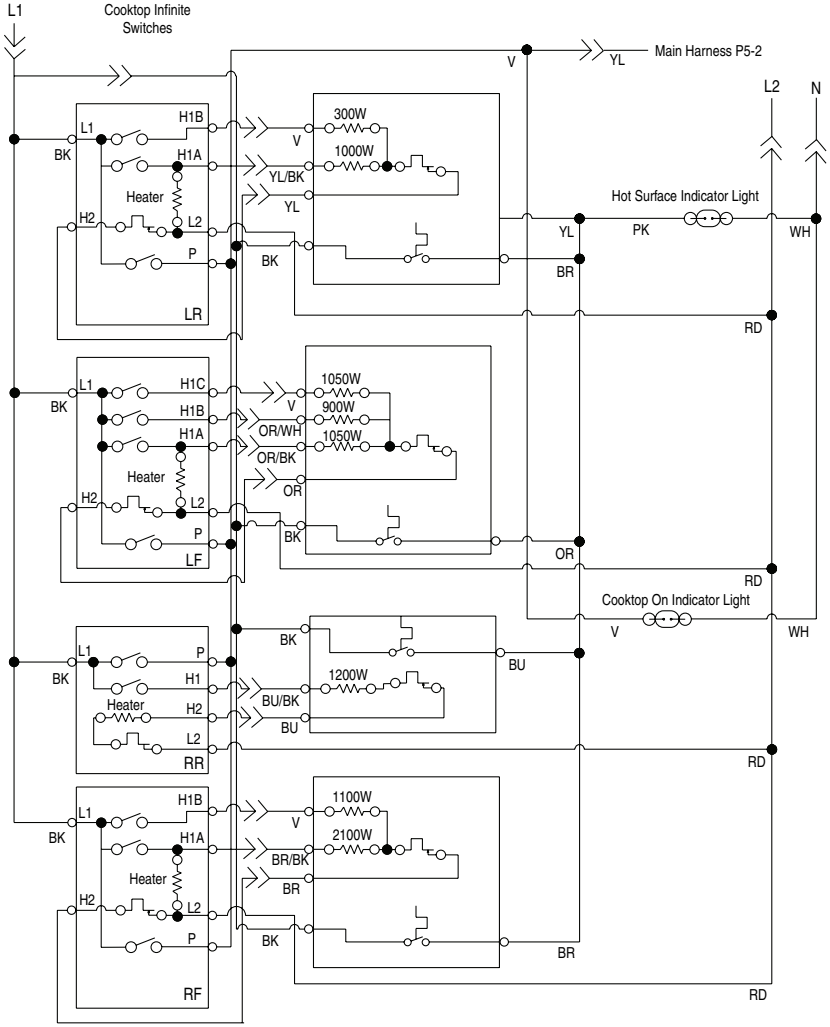

LEGEND

Connection	No Connection	On Some Models	In-Line Connection	P2-1 Connector P2, Position 1	Circuitry Enclosed Within	Terminals	Single Switch	Thermal Switch (opens on heat rise)	Thermal Switch (closes on heat rise)	Resistor or Element	Motor	Incandescent Light	Non-Resettable Fuse	Thermistor	Indicator Light	Triac	Thermo Fuse

For Service Technician Use Only

Wiring diagram for models MES8800F and YMES8800F

NOTE: Schematic shows the oven door open and elements off.

Oven Control Wiring Diagram

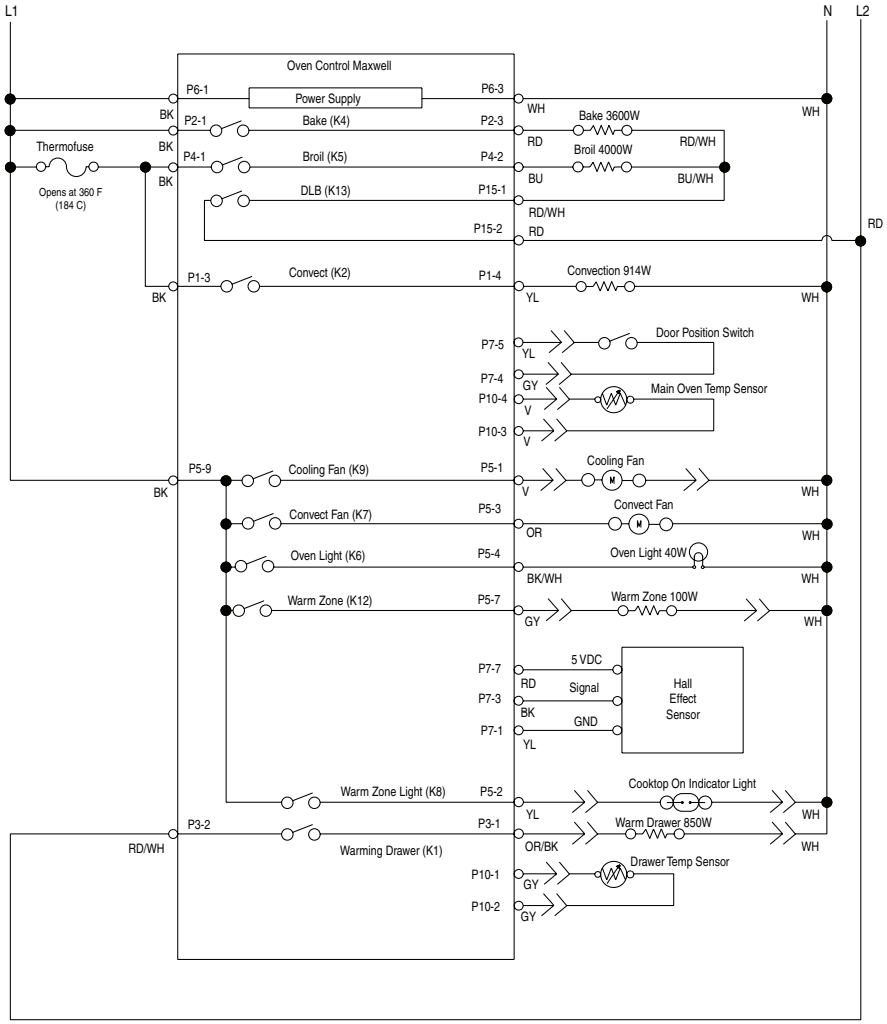

Cooktop Wiring Diagram

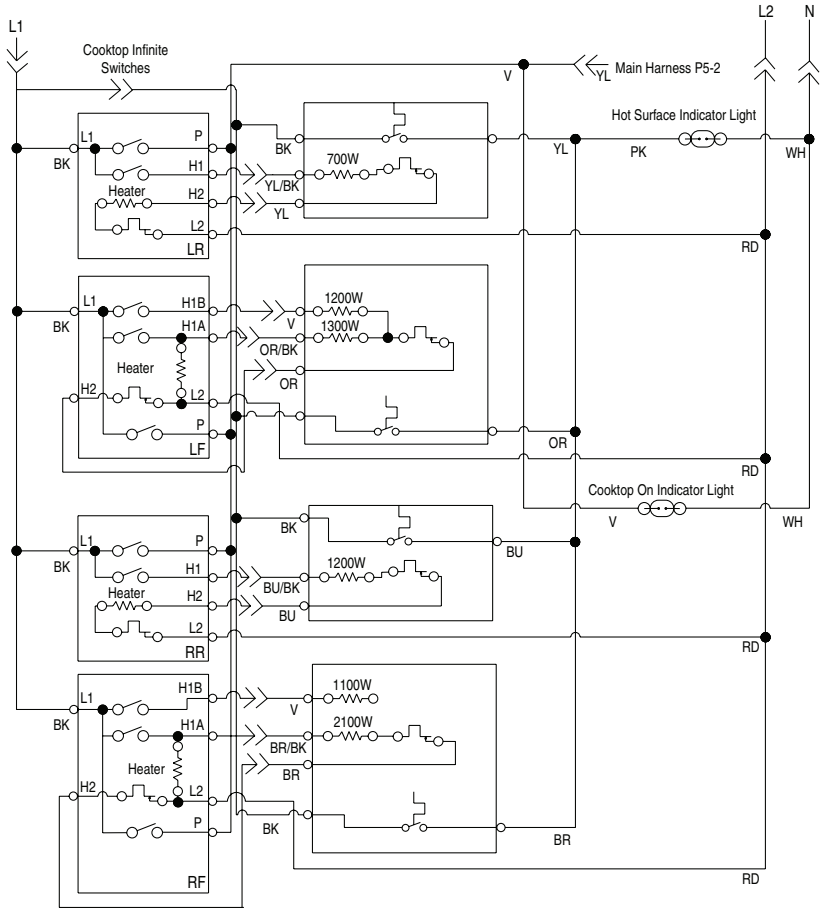

LEGEND

Connection	No Connection	On Some Models	In Line Connection	P2-1 Connector P2, Position 1	Circuitry Enclosed Within	Terminals	Single Switch	Thermal Switch (opens on heat rise)	Thermal Switch (closes on heat rise)	Resistor or Element	Motor	Incandescent Light	Non-resettable Fuse	Thermistor	Indicator Light	Triac

For Service Technician Use Only

Wiring diagram for model YWEE730H0D

NOTE: Schematic shows the oven door open and elements off.

Oven Control Wiring Diagram

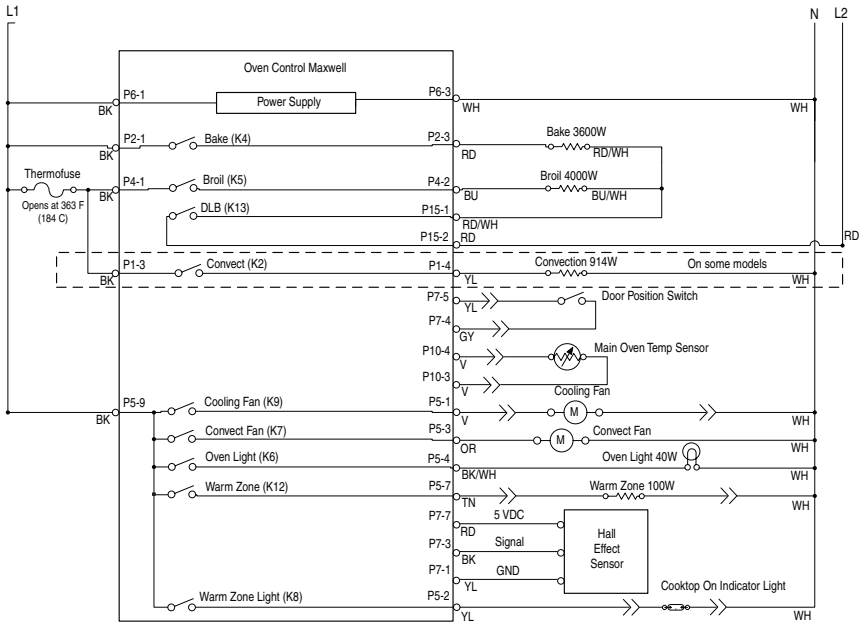

Cooktop Wiring Diagram

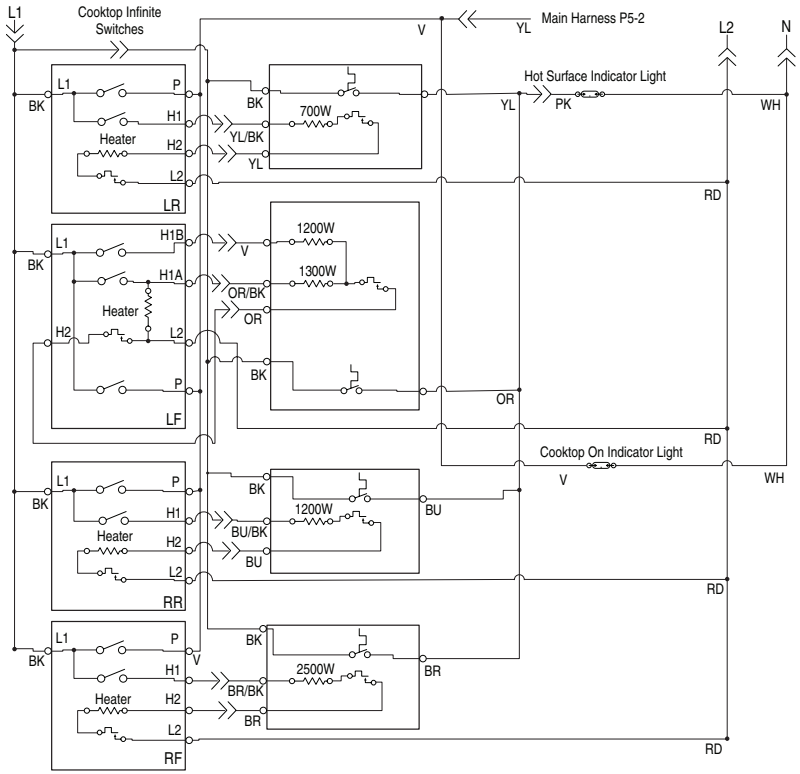

LEGEND

Connection	No Connection	On Some Models	In Line Connection	P2-1 Connector P2, Position 1	Circuitry Enclosed Within	Terminals	Single Switch	Thermal Switch (opens on heat rise)	Thermal Switch (closes on heat rise)	Resistor or Element	Motor	Incandescent Light	Non-resettable Fuse	Thermistor	Indicator Light	Triac

For Service Technician Use Only

Wiring diagram for model YWEE745H0F

NOTE: Schematic shows oven door open and elements off.

Oven Control Wiring Diagram

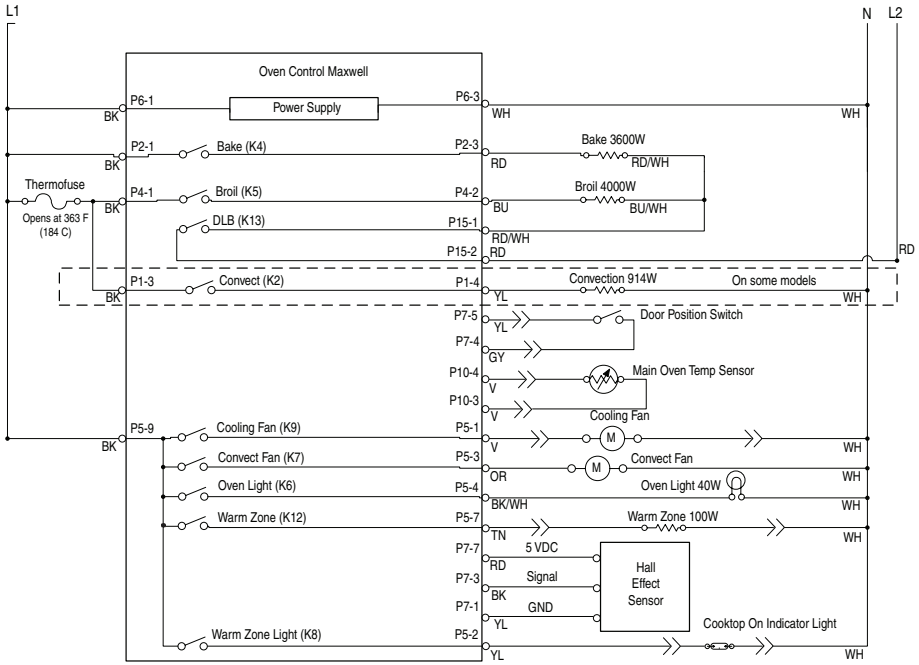

Cooktop Wiring Diagram

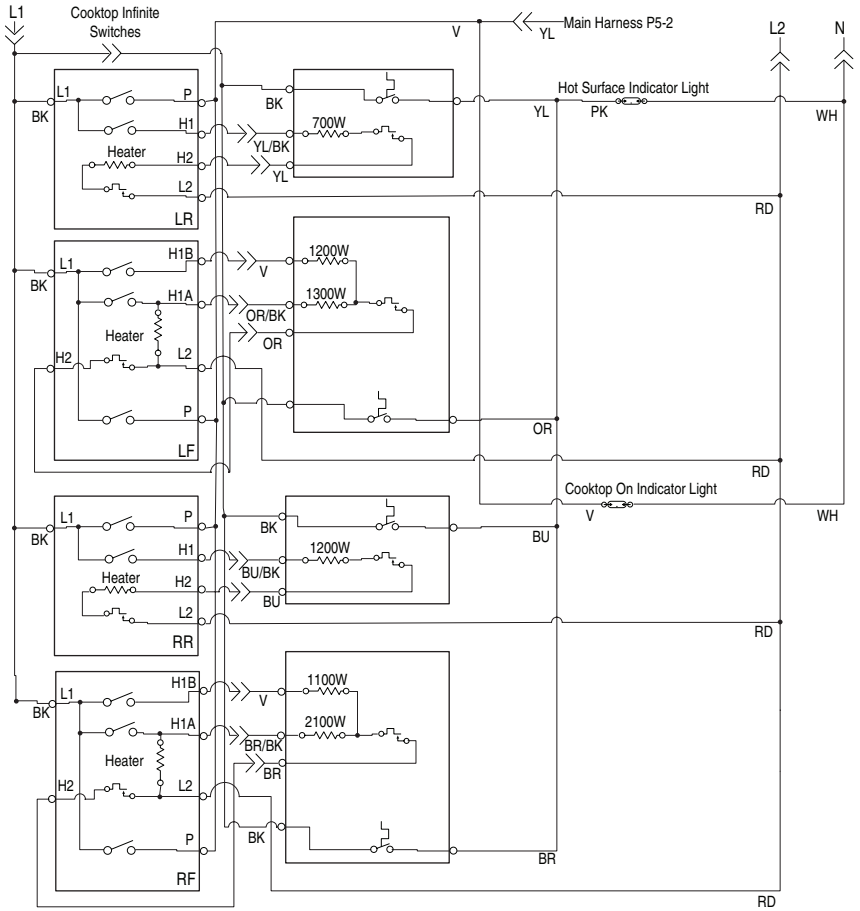

LEGEND

Connection	No Connection	On Some Models	In Line Connection	P2-1 Connector P2, Position 1	Circuitry Enclosed Within	Terminals	Single Switch	Thermal Switch (opens on heat rise)	Thermal Switch (closes on heat rise)	Resistor or Element	Motor	Incandescent Light	Non-resettable Fuse	Thermistor	Indicator Light	Triac

For Service Technician Use Only

Wiring diagram for models WEGA25H0H, WEE750H0H, WEEA25H0H, YWEEA25H0H and YWEE750H0H

NOTE: Schematic shows oven door open and elements off.

Oven Control Wiring Diagram

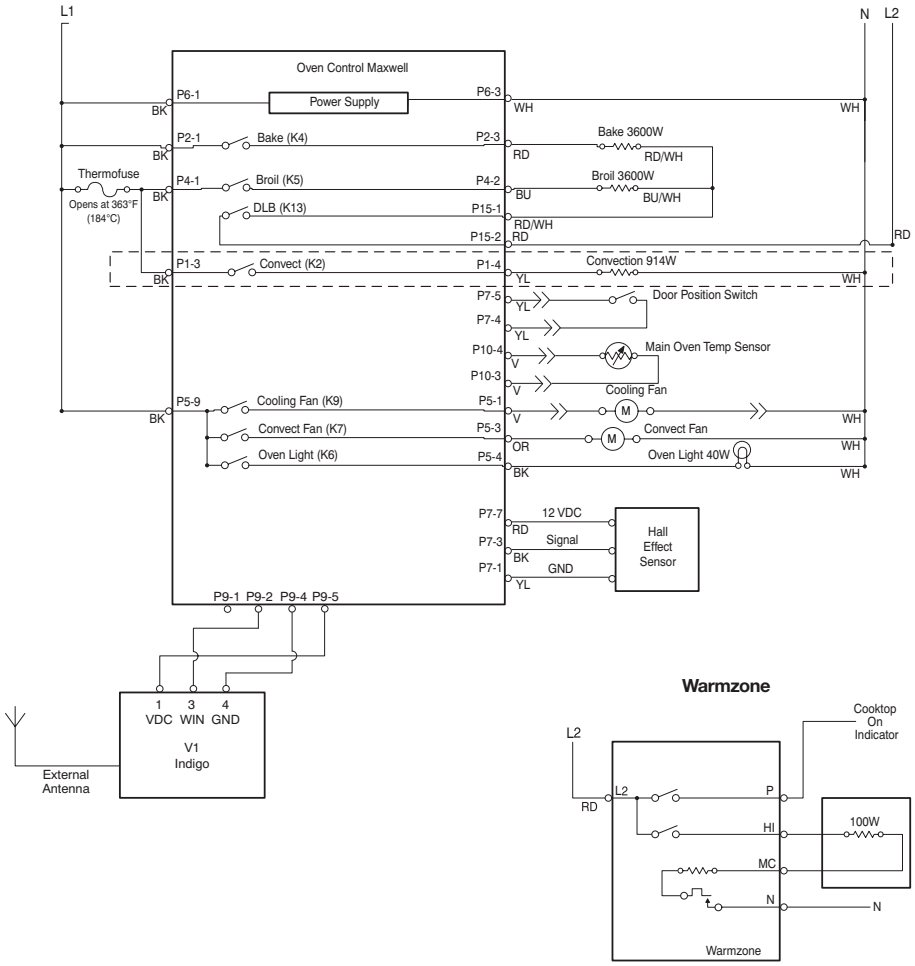

Warmzone

Cooktop Wiring Diagram

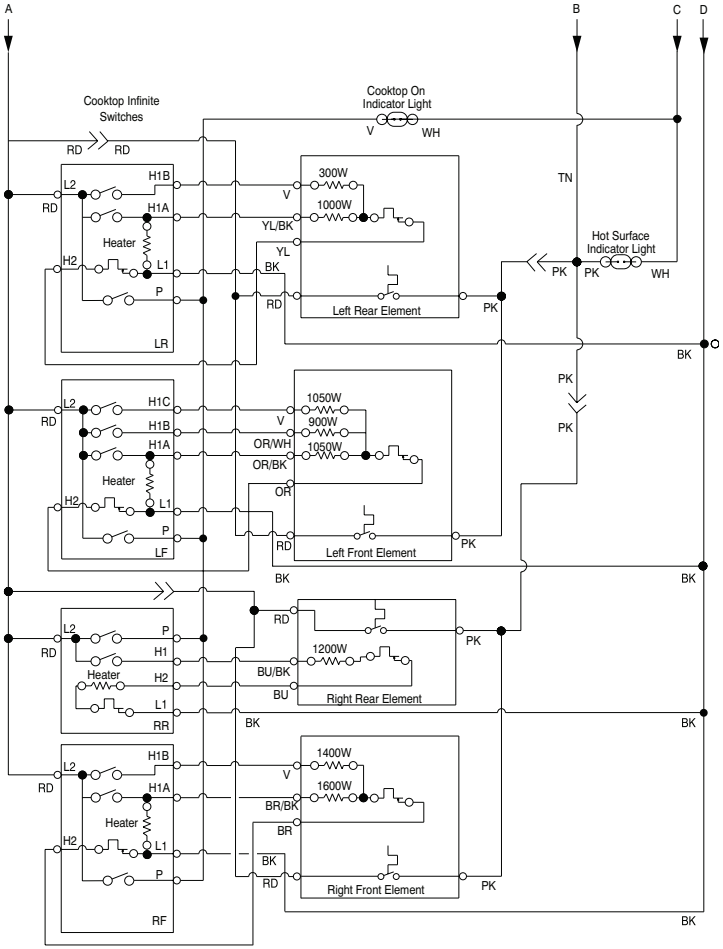

LEGEND

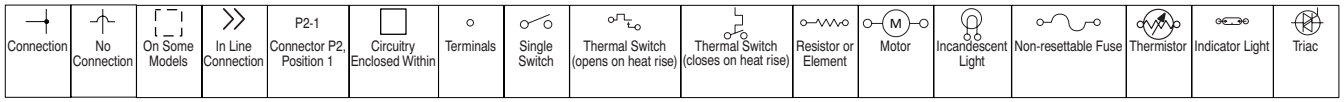

For Service Technician Use Only

Component Testing

Component Testing Chart - Electric Maxwell Models with AquaLift® Technology

NOTE: This Component Testing Chart covers different models. The range may have some or all of the components listed in the following chart.

Do not continue with the diagnosis of the appliance if a fuse is blown, a circuit breaker is tripped, or if there is less than 240+10%/-15% V power supply at the wall outlet.

When checking for proper voltage, complete the following steps:

1. Unplug range or disconnect power.
2. Connect voltage measurement equipment.
3. Plug in range or reconnect power and confirm voltage reading.
4. Unplug range or disconnect power after performing voltage measurements.

Component	From	To	Resistance: Measure Without Power Applied	Notes	Nominal Voltage
Door position switch	P7-4	P7-5	Door open = open circuit Door closed = closed circuit		2 VDC with door open 0 VDC with door closed
Oven light	P5-4	W (Neutral) P6-3	0 - 40 Ω nominal	Measure resistance with oven light switch open and door closed.	N/A
				Measure voltage with oven light switch closed or door open.	120 VAC
Thermo fuse	P2-1	P2-4	Closed circuit (normal) Open circuit if temperatures at the back of the oven exceed 363°F (184°C)	Thermo fuse will open if it exceeds temperature. Measure for a closed circuit (0 resistance).	N/A
Oven sensor	P10-1	P10-2	1000 - 1200 Ω at room temperature	Disconnect connector Con 3 from control before measuring sensor. Measure only resistance, not voltage.	N/A
Bake element	P2-3	P15-1	10 - 40 Ω nominal. Check P2-3 to P15-1 - one open circuit and one closed circuit.	For voltage measurements in Bake mode, Bake cycle must be operating.	240 VAC when energized
Broil element	P4-2	P15-1	10 - 40 Ω nominal. Check P4-2 to P15-1 - one open circuit and one closed circuit.	For voltage measurements in Broil mode, Broil cycle must be operating.	240 VAC when energized
Warming drawer sensor (on some models)	P10-3	P10-4	1000 - 1200 Ω at room temperature	Disconnect connector P10 from control before measuring oven temperature sensor.	N/A
Warming drawer element (on some models)	P4-1	W (Neutral) P6-3	15 - 20 Ω nominal	Measure voltage with Warm Drawer on.	120 VAC
Convection fan motor	P5-3	W (Neutral) P6-3	85 - 90 Ω	Convection fan runs only in Convection Bake mode.	120 VAC
Convection element (on some models)	P1-1	W (Neutral) P6-3	16 Ω nominal	Convection element will cycle on and off. Convection Bake cycle must be operating.	120 VAC
Limiter switches	Term 2B S	Term 1B H	Normally open switch closes at 150°F (65.6°C) to turn on hot surface indicator light.		Normal = Infinite resistance
	RR - 4 to 2 LR - 1 or 3 to 2A LF/RF - 3 or 4 to 2A		Normally closed switch opens at 1050°F (566°C).		Resistance of element will be displayed

For Service Technician Use Only

Quick Connect Plug Maxwell Control

For controls (plugs shown with wires for optional features)

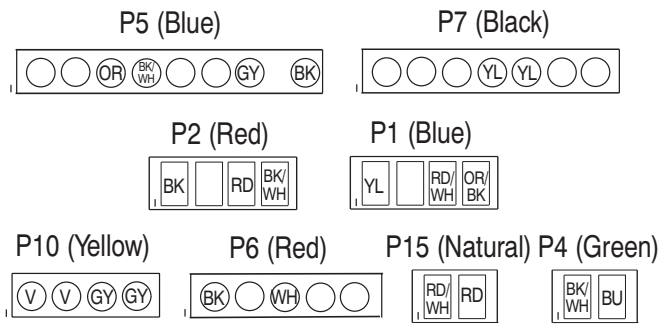

For cooktop

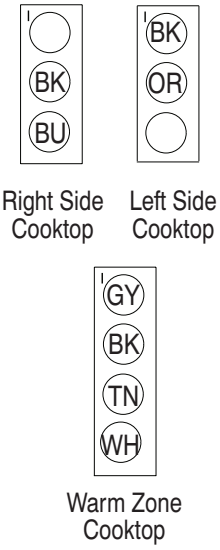

Maxwell Control - Rear View

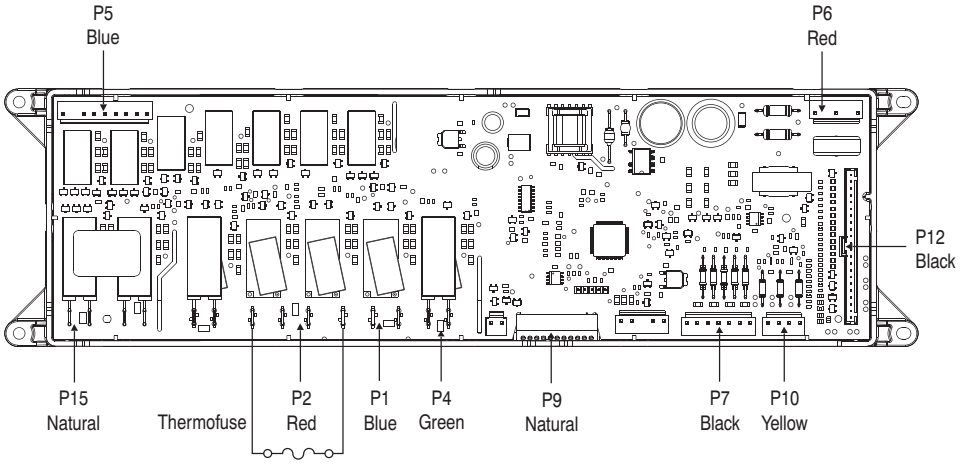

Conn	Pin	Function	Conn	Pin	Function	Conn	Pin	Function
P1 (Blue)	1	Convection element	**P5 (Blue)**	3	Convection fan	**P10 (Yellow)**	1	Oven temp sensor
	3	Warming drawer - L2 input		4	Oven light		2	Oven temp sensor
	4	Warming drawer		7	Warm zone		3	Warming drawer temp sensor
P2 (Red)	1	Bake - L1 input		9	L1 input		4	Warming drawer temp sensor
	3	Bake	**P6 (Red)**	1	Control - L1 input	**P12 (Black)**	1 - 22	Keyboard interface
	4	Convection element - L1 input		3	Control neutral		1	DLB to bake/broil elements
P4 (Green)	1	Broil - L1 input	**P7 (Black)**	4	Door switch common		2	DLB to L2
	2	Broil		5	Door position switch			
			P9 (Natural)	1	Ground			
				2	Data 5V logic			

For Service Technician Use Only

Component Testing Chart - Gas Model with Maxwell Control

NOTE: Do not continue with the diagnosis of the appliance if a fuse is blown, a circuit breaker is tripped, or if there is less than a 120 +10%/-15% V power supply at the wall outlet.

To measure for proper voltage, complete the following steps:

1. Unplug range or disconnect power.
2. Connect voltage measurement equipment.
3. Plug in range or reconnect power and confirm voltage reading.
4. Unplug range or disconnect power after performing voltage measurements.

Component	From	To	Results	Notes	Nominal Voltage
Door position switch	P7-4	P7-5	Door open = open circuit Door closed = closed circuit		5 VDC
Oven sensor	P10-1	P10-2	1000 - 1200 Ω at room temperature	Disconnect connector P3 from control before measuring oven temperature sensor	N/A
Warming drawer sensor	P10-3	P10-4	1000 - 1200 Ω at room temperature	Disconnect connector P3 from control before measuring oven temperature sensor	N/A
Oven light	P5-4	W (Neutral) P6-3	0 - 40 Ω nominal	Measure resistance with oven light switch off and door closed. Measure voltage with oven light switch on or door open.	120 VAC
Warming drawer element	P1-4	W (Neutral) P6-3	15 - 20 Ω nominal	Measure voltage with Warm Drawer on.	120 VAC
Convection fan motor	P5-3	W (Neutral) P6-3	15 - 20 Ω nominal (electric) 30 - 35 Ω nominal (gas)	Convection fan runs only in Convection Bake mode	120 VAC
Convection element	P1-1	W (Neutral) P6-3	16 Ω nominal	Convection element will cycle on and off in Convection Bake mode	120 VAC
DSI board	J1-4	J1-6	N/A	Must be in Bake mode. Verify burner operation.	120 VAC
	J1-4	J1-7	N/A	Must be in Broil mode. Verify burner operation.	120 VAC
	J1-4	J1-10	N/A	Verify voltage to DSI board	120 VAC
	J1-1	J1-2	216 Ω nominal	Must be in Bake mode. Verify burner operation.	8-18 VDC
	J1-3	J1-2	216 Ω nominal	Must be in Broil mode. Verify burner operation.	8-18 VDC
Surface burner spark module	L	N	N/A	Turn one cooktop knob to “LITE” position. Verify that the burner sparks.	120 VAC

For Service Technician Use Only

Quick Connect Plug

For controls (plugs shown with wires for optional features)

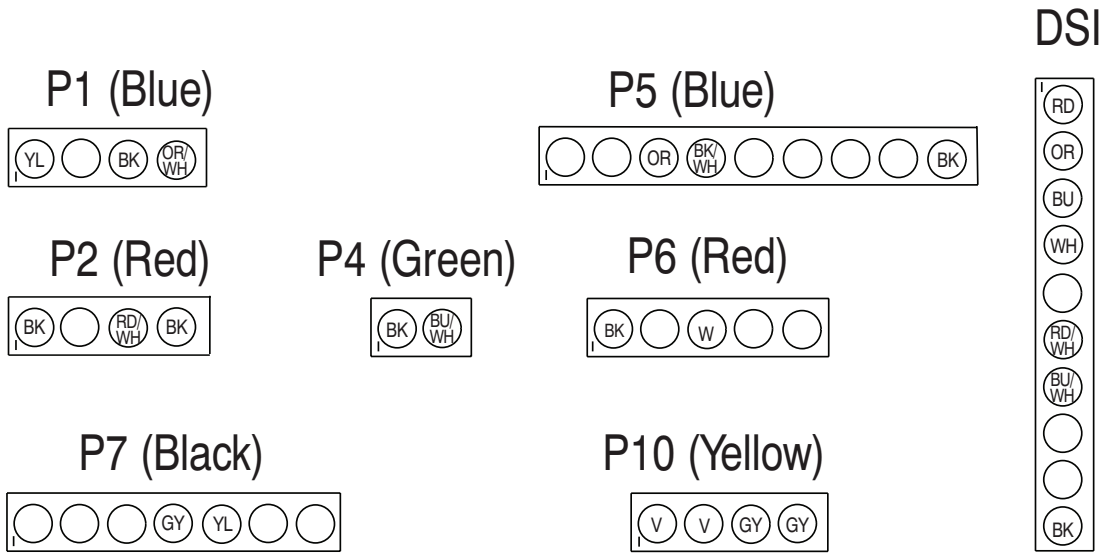

Maxwell Control - Rear View

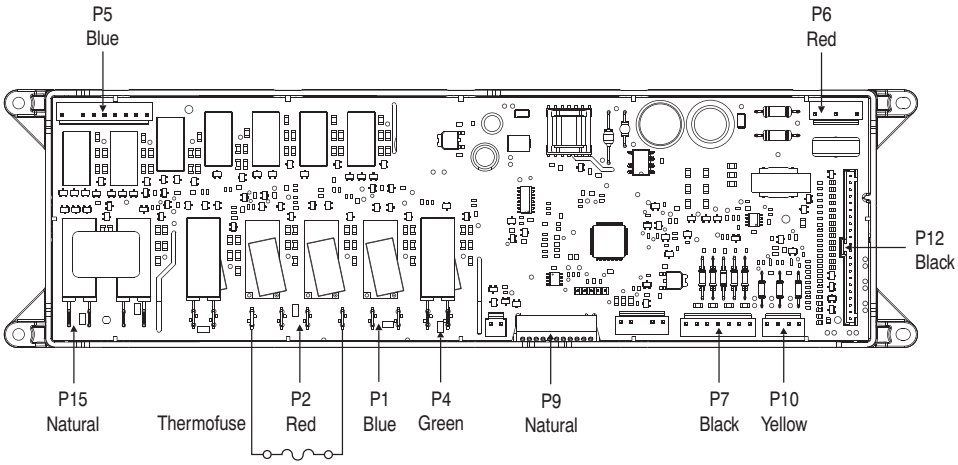

Conn	Pin	Function	Conn	Pin	Function	Conn	Pin	Function
P1 (Blue)	1	Convection element	**P5 (Blue)**	3	Convection fan	**P10 (Yellow)**	1	Oven temperature sensor
	3	Warming drawer - L2 input		4	Oven light		2	Oven temperature sensor
	4	Warming drawer		7	Warm zone		3	Warming drawer temperature sensor
P2 (Red)	1	Bake - L1 input		9	L1 input		4	Warming drawer temperature sensor
	3	Bake	**P6 (Red)**	1	Control - L1 input	**P12 (Black)**	1 - 22	Keyboard interface
	4	Convection element - L1 input		3	Control neutral		1	DLB to bake/broil elements
P4 (Green)	1	Broil - L1 input	**P7 (Black)**	4	Door switch common		2	DLB to L2
	2	Broil		5	Door position switch			
			P9 (Natural)	1	Ground			
				2	Data 5V logic			

For Service Technician Use Only

Component Testing Chart - Electric MRC Models with AquaLift® Technology

NOTE: This Component Testing Chart covers different models. The range may have some or all of the components listed in the following chart.

Do not continue with the diagnosis of the appliance if a fuse is blown, a circuit breaker is tripped, or if there is less than 240+10%/-15% V power supply at the wall outlet.

When checking for proper voltage, complete the following steps:

1. Unplug range or disconnect power.
2. Connect voltage measurement equipment.
3. Plug in range or reconnect power and confirm voltage reading.
4. Unplug range or disconnect power after performing voltage measurements.

Component	From	To	Resistance: Measure Without Power Applied	Notes	Nominal Voltage
Door position switch	P7-4	P7-5	Door open = open circuit Door closed = closed circuit		2 VDC with door open 0 VDC with door closed
Oven light	P5-4	W (Neutral) P6-3	0 - 40 Ω nominal	Measure resistance with oven light switch open and door closed.	N/A
				Measure voltage with oven light switch closed or door open.	120 VAC
Thermo fuse	P1-3	P2-4	Closed circuit (normal) Open circuit if temperatures at the back of the oven exceed 360°F (184°C)	Thermo fuse will open if it exceeds temperature. Measure for a closed circuit (0 resistance).	N/A
Oven sensor	P10-1	P10-2	1000 - 1200 Ω at room temperature	Disconnect connector P10 from control before measuring sensor. Measure only resistance, not voltage.	N/A
Bake element	P1-4	P3-1/P3-2	10 - 40 Ω nominal. Check P3-1 to P3-2 - one open circuit and one closed circuit.	For voltage measurements in Bake mode, Bake cycle must be operating.	240 VAC when energized
Broil element	P1-1	P3-1/P3-2	10 - 40 Ω nominal. Check P3-1 to P3-2 - one open circuit and one closed circuit.	For voltage measurements in Broil mode, Broil cycle must be operating.	240 VAC when energized
Warming drawer sensor (on some models)	P10-3	P10-4	1000 - 1200 Ω at room temperature	Disconnect connector P10 from control before measuring oven temperature sensor.	N/A
Warming drawer element (on some models)	P4-2	W (Neutral) P6-3	15 - 20 Ω nominal	Measure voltage with Warm Drawer on.	120 VAC
Convection fan motor	P5-2	W (Neutral) P6-3	85 - 90 Ω	Convection fan runs only in Convection Bake mode.	120 VAC
Convection element (on some models)	P2-3	W (Neutral) P6-3	16 Ω nominal	Convection element will cycle on and off. Convection Bake cycle must be operating.	120 VAC
Limiter switches	Term 2B S	Term 1B H	Normally open switch closes at 150°F (65.6°C) to turn on hot surface indicator light.		Normal = Infinite resistance
	Term Single - 1A', Dual - 4/4A or 3/1, Triple - P1	Term 2A or 2	Normally closed switch opens at 1050°F (566°C).		Resistance of element will be displayed

For Service Technician Use Only

Quick Connect Plug MRC Control

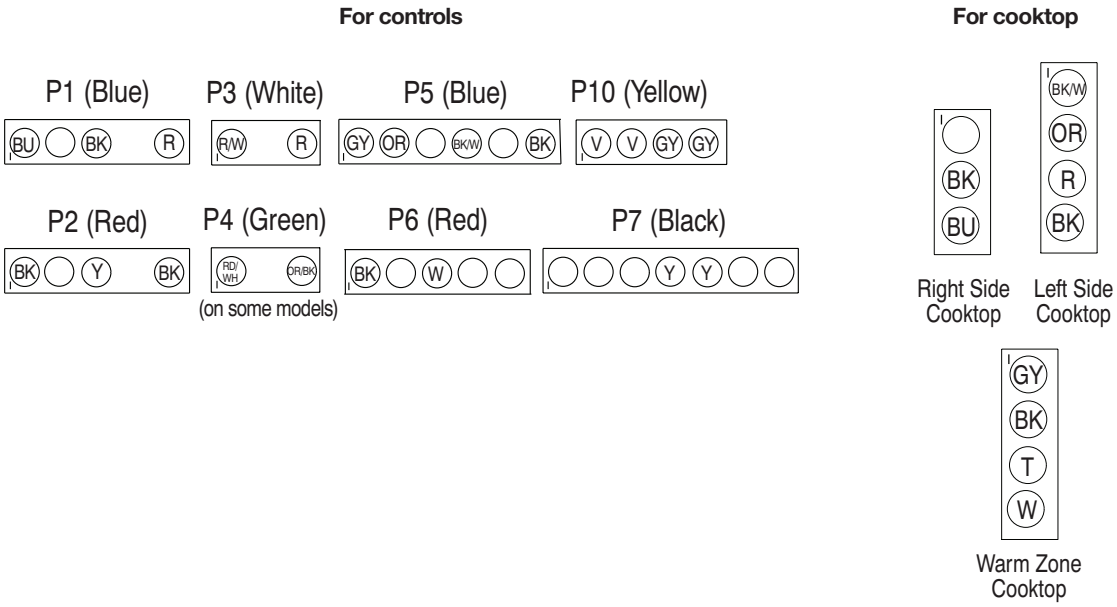

MRC Control Electric Models - Rear View

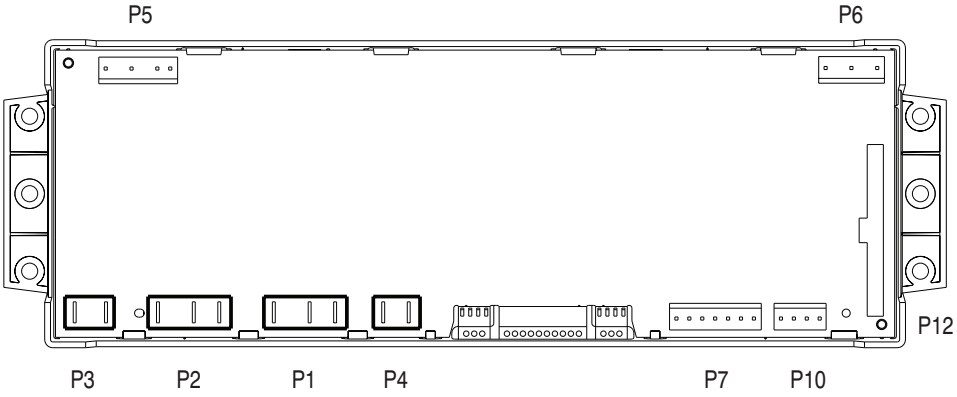

Conn	Pin	Function	Conn	Pin	Function
P1 (Blue)	1	Broil	**P6 (Red)**	1	Control - L1 input
	3	Bake L1 input		3	Control neutral
	4	Bake	**P7 (Black)**	4	Door switch common
P2 (Red)	1	Convection element - L1 input		5	Door position switch
	3	Convection element	**P10 (Yellow)**	1	Oven temp sensor
	4	L1 input - broil		2	Oven temp sensor
P4 (Green) (on some models)	1	Warming drawer - L1 input		3	Warm drawer temp sensor
	2	Warming drawer		4	Warm drawer temp sensor (3 and 4 on some models)
P5 (Blue)	1	Warming center element			
	2	Convection fan			
	4	Oven light			
	6	L1 input			

For Service Technician Use Only

Component Testing Chart - Gas Model with MRC Control

NOTE: Do not continue with the diagnosis of the appliance if a fuse is blown, a circuit breaker is tripped, or if there is less than a 120 +10%/-15% V power supply at the wall outlet.

To measure for proper voltage, complete the following steps:

1. Unplug range or disconnect power.
2. Connect voltage measurement equipment.
3. Plug in range or reconnect power and confirm voltage reading.
4. Unplug range or disconnect power after performing voltage measurements.

Component	From	To	Results	Notes	Nominal Voltage
Door switch	P7-4	P7-5	Door open = open circuit Door closed = closed circuit		5 VDC
Latch Motor	P5-3	W (Neutral) P6-3	500 - 3000 Ω	Latch motor locks door at start of Clean cycle	120 VAC
Oven temperature sensor	P10-1	P10-2	1000 - 1200 Ω at room temperature	Disconnect connector P3 from control before measuring oven temperature sensor	N/A
Warming drawer temperature sensor	P10-3	P10-4	1000 - 1200 Ω at room temperature	Disconnect connector P3 from control before measuring oven temperature sensor	N/A
Oven light	P5-4	W (Neutral) P6-3	0 - 40 Ω nominal	Measure resistance with oven light switch off and door closed. Measure voltage with oven light switch on or door open.	120 VAC
Warming drawer element	P4-2	W (Neutral) P6-3	15 - 20 Ω nominal	Measure voltage with Warm Drawer on.	120 VAC
Convection fan motor	P5-2	W (Neutral) P6-3	15 - 20 Ω nominal (electric) 30 - 35 Ω nominal (gas)	Convection fan runs only in Convection Bake mode	120 VAC
Convection element	P2-3	W (Neutral) P6-3	16 Ω nominal	Convection element will cycle on and off in Convection Bake mode	120 VAC
Latch Switch	P7-4	P7-6	Door open = open circuit Door closed = closed circuit		5 VDC
DSI board	J1-4	J1-6	N/A	Must be in Bake mode. Verify burner operation.	120 VAC
	J1-4	J1-7	N/A	Must be in Broil mode. Verify burner operation.	120 VAC
	J1-4	J1-10	N/A	Verify voltage to DSI board	120 VAC
	J1-1	J1-2	216 Ω nominal	Must be in Bake mode. Verify burner operation.	8-18 VDC
	J1-3	J1-2	216 Ω nominal	Must be in Broil mode. Verify burner operation.	8-18 VDC
Surface burner spark module	L	N	N/A	Turn one cooktop knob to “LITE” position. Verify that the burner sparks.	120 VAC

For Service Technician Use Only

Quick Connect Plug

For controls (plugs shown with wires for optional features)

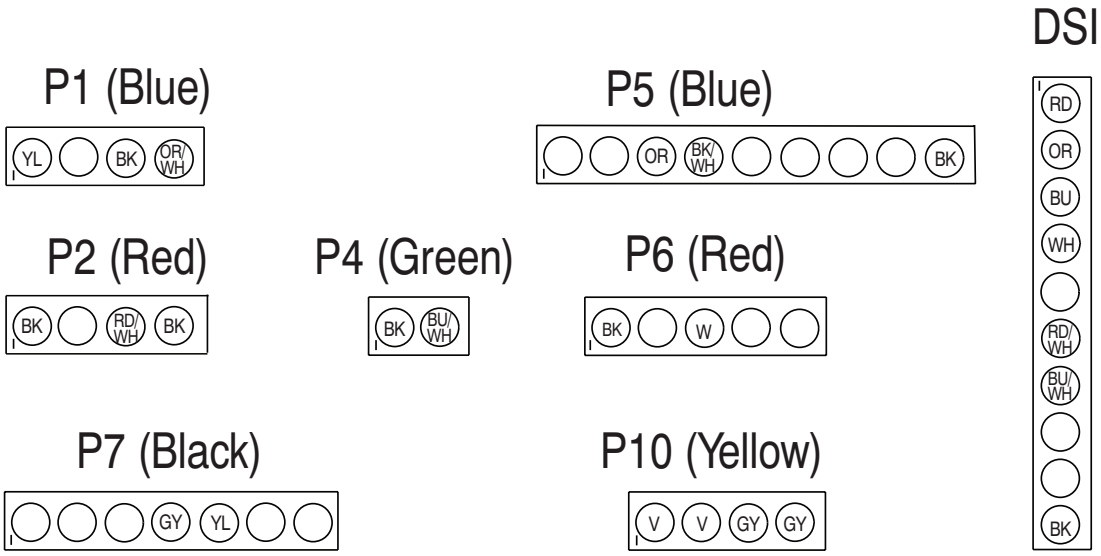

MRC Control Gas Models - Rear View

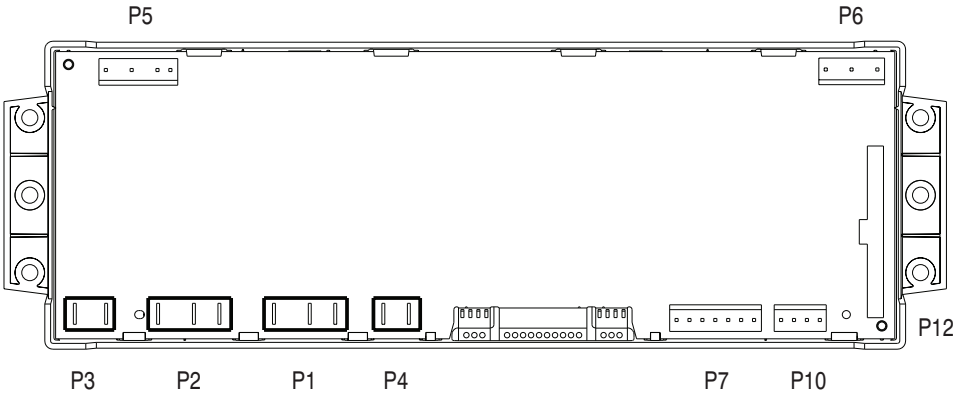

Conn	Pin	Function	Conn	Pin	Function
P1 (Blue)	1	Broil	**P6 (Red)**	1	Control - L1 input
	3	Bake L1 input		3	Control neutral
	4	Bake	**P7 (Black)**	4	Door switch common
P2 (Red)	1	Convection element - L1 input		5	Door position switch
	3	Convection element	**P10 (Yellow)**	1	Oven temp sensor
	4	L1 input - broil		2	Oven temp sensor
P4 (Green) (on some models)	1	Warming drawer - L1 input		3	Warm drawer temp sensor
	2	Warming drawer		4	Warm drawer temp sensor (3 and 4 on some models)
P5 (Blue)	1	Warming center element			
	2	Convection fan			
	4	Oven light			
	6	L1 input			

For Service Technician Use Only

Component Testing Chart - All Models with LCX Control

NOTE: This Component Testing Chart covers different models. The range may have some or all of the components listed in the following chart. Do not continue with the diagnosis of the appliance if a fuse is blown, a circuit breaker is tripped, or if there is less than a 240 +10%/-15% V power supply at the wall outlet.

When checking for proper voltage, complete the following steps:

1. Unplug range or disconnect power.
2. Connect voltage measurement equipment.
3. Plug in range or reconnect power and confirm voltage reading.
4. Unplug range or disconnect power after performing voltage measurements.

Component	From	To	Resistance: Measure Without Power Applied	Notes	Nominal Voltage
Door switch	P3-1	P3-2	Door open = open circuit Door closed = closed circuit		2 VDC with door open 0 VDC with door closed
Oven temperature sensor	P3-4	P3-5	1000 - 1200 Ω at room temperature. Measure only resistance, not voltage. The operating temperature range is from -40°F (-40°C) to 1100°F (593°C).	Disconnect connector P3 from control before measuring RTD.	N/A
Oven light	P2-1	W (Neutral) P6-3	0 - 40 Ω nominal		120 VAC
Bake element	P4-3	P5-4	10 - 40 Ω nominal	For voltage, measure in Bake mode; will cycle between Bake and Broil elements on when heating.	240 VAC
Broil element	P5-1	P5-4	10 - 40 Ω nominal	For voltage, measure in Broil mode. Only Broil element is on when heating.	240 VAC
Thermo fuse	P5-1	P5-4	Closed circuit	Thermo fuse will open if it exceeds temperature. Nominal voltage is measured when Broil element is energized.	240 VAC
Door latch motor	P3-3	WH (neutral) P1-3	500 - 3000 Ω	Latch motor locks door at start of Clean cycle.	120 VAC
Radiant element (single)	H1	H2	Thermal limiter opens at 1040°F (560°C).	"Cooktop On" will show in the control main display when any element is on.	240 VAC
Radiant element (dual)	H1A	H2			
Coil element	H1	H2		"Cooktop On" will show in the control main display when any element is on.	240 VAC

For Service Technician Use Only

Component Testing Chart - Electric LCC Models with AquaLift® Technology

NOTE: This Component Testing Chart covers different models. The range may have some or all of the components listed in the following chart. Do not continue with the diagnosis of the appliance if a fuse is blown, a circuit breaker is tripped, or if there is less than a 240 +10%/-15% V power supply at the wall outlet.

When checking for proper voltage, complete the following steps:

1. Unplug range or disconnect power.
2. Connect voltage measurement equipment.
3. Plug in range or reconnect power and confirm voltage reading.
4. Unplug range or disconnect power after performing voltage measurements.

Component	From	To	Resistance: Measure Without Power Applied	Notes	Nominal Voltage
Door switch	Con 3-3	Con 3-4	Door open = open circuit Door closed = closed circuit		2 VDC with door open 0 VDC with door closed
Oven light	Con 1-4	Con 1-1 W (Neutral)	0 - 40 Ω nominal	Measure resistance with oven light switch Open/Off and door closed.	N/A
				Measure voltage with oven light switch Closed/On or door open.	120 VAC
Thermo fuse	Con 2-1	Con 4-3 Con 4-1	Closed circuit (normal) Open circuit if thermo fuse exceeded temperature	Thermo fuse will open if it exceeds temperature. Nominal voltage is measured when broil element is energized.	240 VAC
Oven sensor	Con 3-9	Con 3-10	1000 - 1200 Ω at room temperature	Disconnect connector Con 3 from control before measuring sensor. Measure only resistance, not voltage.	N/A
Bake element	Con 2-7	Con 4-3 Con 4-1	10 - 40 Ω nominal. Check both Con 4 terminals - one open circuit and one closed circuit if both Con 4 wires are Red.	For voltage measurements in Bake mode, Bake cycle must be operating.	240 VAC when energized
Broil element	Con 2-1	Con 4-3 Con 4-1	10 - 40 Ω nominal. Check both Con 4 terminals - one open circuit and one closed circuit if both Con 4 wires are Red.	For voltage measurements in Broil mode, Broil cycle must be operating.	240 VAC when energized
Convection fan	Con 1-5	Con 1-1 (Neutral)	85 - 90 Ω	Convection fan runs only in Convection Bake mode.	120 VAC
Limiter switches	Term 2B or S	Term 1B or H	Normally open switch closes at 150°F (65.6°C) to turn on hot surface indicator light.		Normal = Infinite resistance
	Term Single—1A' Dual—4/4A or 3/1 Triple—P1	Term 2A or 2	Normally closed switch opens at 1050°F (566°C).		Normal = 0 resistance

For Service Technician Use Only

Quick Connect Plug

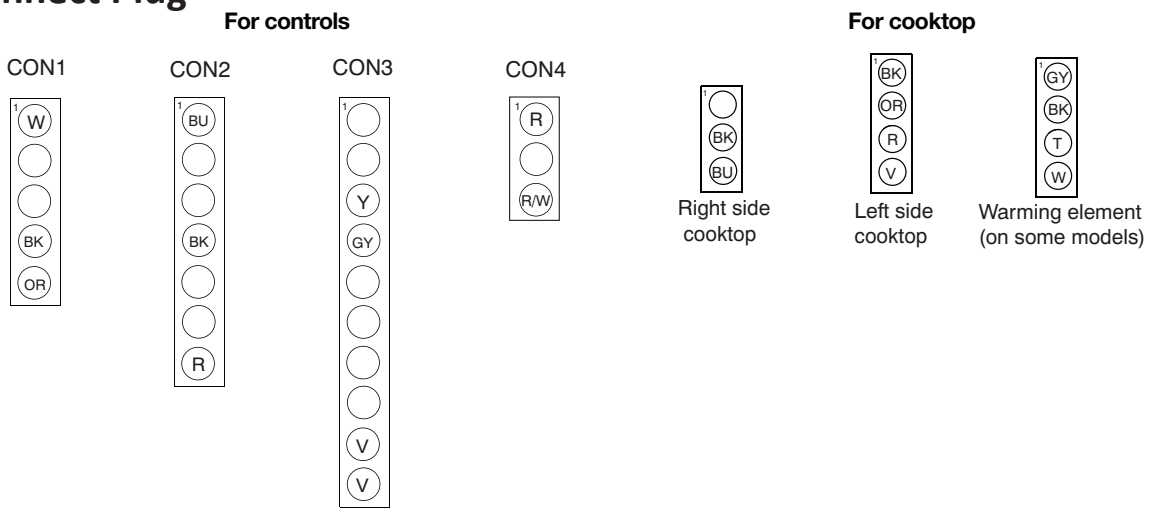

All LCC Control Electric Models - Rear View

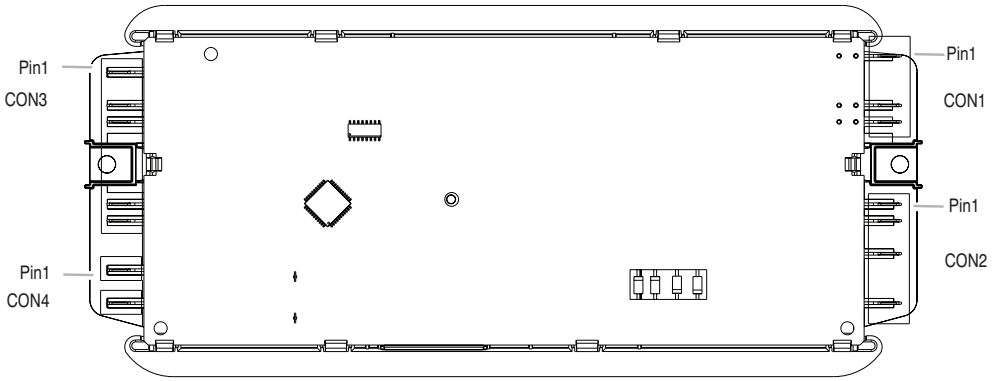

Control Connector	Pin	Function
CON1	1	Control neutral
	4	Oven light
	5	Convection fan
CON2	1	Broil
	4	L1 input
	7	Bake
CON3	3	Door switch (closed circuit)
	4	Door switch (closed circuit)
	9	Oven temperature sensor
	10	Oven temperature sensor
CON4	1	L2 input
	3	Double line break (DLB)

For Service Technician Use Only

Component Testing Chart - Gas Models with LCC Controls

NOTE: Do not continue with the diagnosis of the appliance if a fuse is blown, a circuit breaker is tripped, or if there is less than a 240 +10%/-15% V power supply at the wall outlet.

When checking for proper voltage, complete the following steps:

1. Unplug range or disconnect power.
2. Connect voltage measurement equipment.
3. Plug in range or reconnect power and confirm voltage reading.
4. Unplug range or disconnect power after performing voltage measurements.

Component	From	To	Resistance: Measure Without Power Applied	Notes	Nominal Voltage
Door switch	Con 3-3	Con 3-4	Door open = open circuit Door closed = closed circuit		2 VDC with door open 0 VDC with door closed
Oven light	Con 1-4	Con 1-1 W (Neutral)	0 - 40 Ω nominal	Measure resistance with oven light switch Open/Off and door closed.	N/A
				Measure voltage with oven light switch Closed/On or door open.	120 VAC
Oven temperature sensor	Con 3-9	Con 3-10	1000 - 1200 Ω at room temperature	Disconnect connector Con 3 from control before measuring sensor. Measure only resistance, not voltage.	N/A
Convection fan	Con 1-5	Con 1-1 (Neutral)	10 - 80 Ω nominal	Convection fan runs only in Convection Bake mode.	120 VAC
DSI board	J1-4	J1-6	N/A	Must be in Bake mode. Verify burner operation.	120 VAC
	J1-4	J1-7	N/A	Must be in Broil mode. Verify burner operation.	120 VAC
	J1-4	J1-10	N/A	Verify voltage to DSI board.	120 VAC
	JI-1	JI-2	216 Ω nominal	Must be in Bake mode. Verify burner operation.	8-18 VDC
	JI-3	JI-2	216 Ω nominal	Must be in Broil mode. Verify burner operation.	8-18 VDC
Surface burner spark module	L	N	N/A	Turn one cooktop knob to “LITE” position. Visually verify that all burners spark.	120 VAC

For Service Technician Use Only

Quick Connect Plug

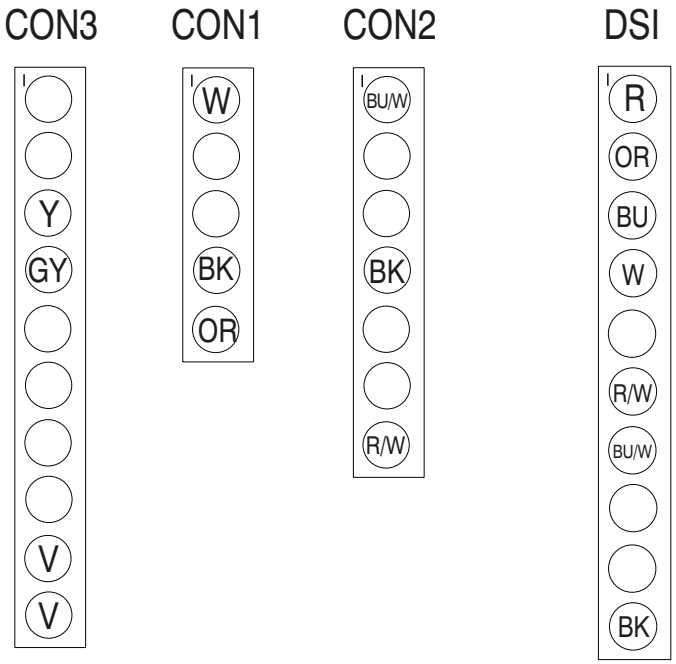

All LCC Control Gas Models - Rear View

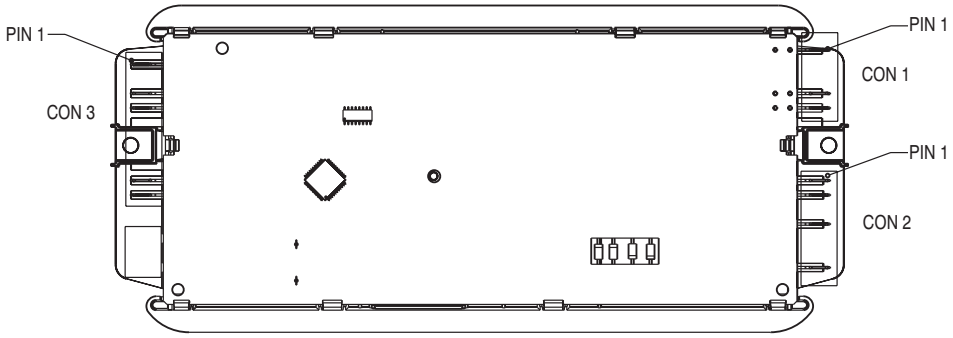

Control Connector	Pin	Function
CON1	1	Control neutral
	4	Oven light
	5	Convection fan
CON2	1	Broil
	4	L1 input
	7	Bake
CON3	3	Door switch (closed circuit)
	4	Door switch (closed circuit)
	9	Oven temperature sensor
	10	Oven temperature sensor

For Service Technician Use Only

Component Testing Chart - All Models with Indigo Controls

To check for proper voltage, complete the following steps:

1. Unplug range or disconnect power.
2. Connect voltage measurement equipment.
3. Plug in range or reconnect power and confirm voltage reading.
4. Unplug range or disconnect power after performing voltage measurements.

Component	From	To	Resistance: Measure Without Power Applied	Notes	Nominal Voltage
Door switch	P7-4	P7-5	Door open = open circuit Door closed = closed circuit		5 VDC
Main cavity oven temperature sensor	P10-4	P10-3	1000 - 1200 Ω at room temperature. Measure only resistance, not voltage. The operating temperature range is from -40°F (-40°C) to 1100°F (593°C).	Disconnect connector P10 from control before measuring RTD.	NA
Oven light	P5-4	W (Neutral) P6-3	0 - 40 Ω nominal		120 VAC
Thermofuse (TOD)	P4-1	P6-1	Closed circuit 0 Ω nominal. The switch closed at 170°F ± 11°F (76°C ± 6°C) and opens at 280°F ± 8°F (138°C ± 4°C). Current = 25 A Voltage = 240 V	Hi Limit switch will open if temperature exceeded.	240 VAC
Bake igniter (gas)	P2-3	W (Neutral) P6-3	40 - 400 Ω nominal at room temperature.	Disconnect bake igniter pigtail connection	120/240 VAC
Broil igniter (gas)	P4-2	W (Neutral) P6-3	40 - 400 Ω nominal at room temperature.	Disconnect broil igniter pigtail connection	120 VAC
Main cavity bake element	P2-3	P15-1	10 - 40 Ω nominal	For voltage measure in Bake mode; will cycle between Bake and Broil elements on when heating	240 VAC
Broil element	P4-2	P15-1	10 - 40 Ω nominal	For voltage, measure in Broil mode. Only broil element on when heating.	240 VAC
Convection element	P1-4	W (Neutral) P6-3	10 - 40 Ω nominal	For voltage, measure in Convection mode; only convection element will be on when heating	120 VAC
Convection fan motor	P5-3	W (Neutral) P6-3	80 - 95 Ω nominal	Convection fan runs in all convection cycles and during Bake preheat	120 VAC
Cooktop element (single)	H1	H2	23 - 83 Ω nominal		240 VAC
Single, dual, and triple burner elements	Term H1 (Single only) Term 4, 4A (double only)	Term 4, 4A	Thermal switch closes/opens at 150°F (66°C) to turn on/off hot surface indicator light.	Infinite switch cycles on/off when hot	120 VAC
	Term 1, 4, 4A (triple only)	Term 2 A	Thermal limiter 0 Ω opens at 1100°F (593°C)	Cooktop On indicator light is on when any burner is turned on	240 VAC

NOTES:

- In gas models, the convection fan comes on only after a 5-minute delay in any applicable cooking modes.
- In electric models, the convection fan comes on immediately in any applicable cooking modes.

For Service Technician Use Only

Component Location

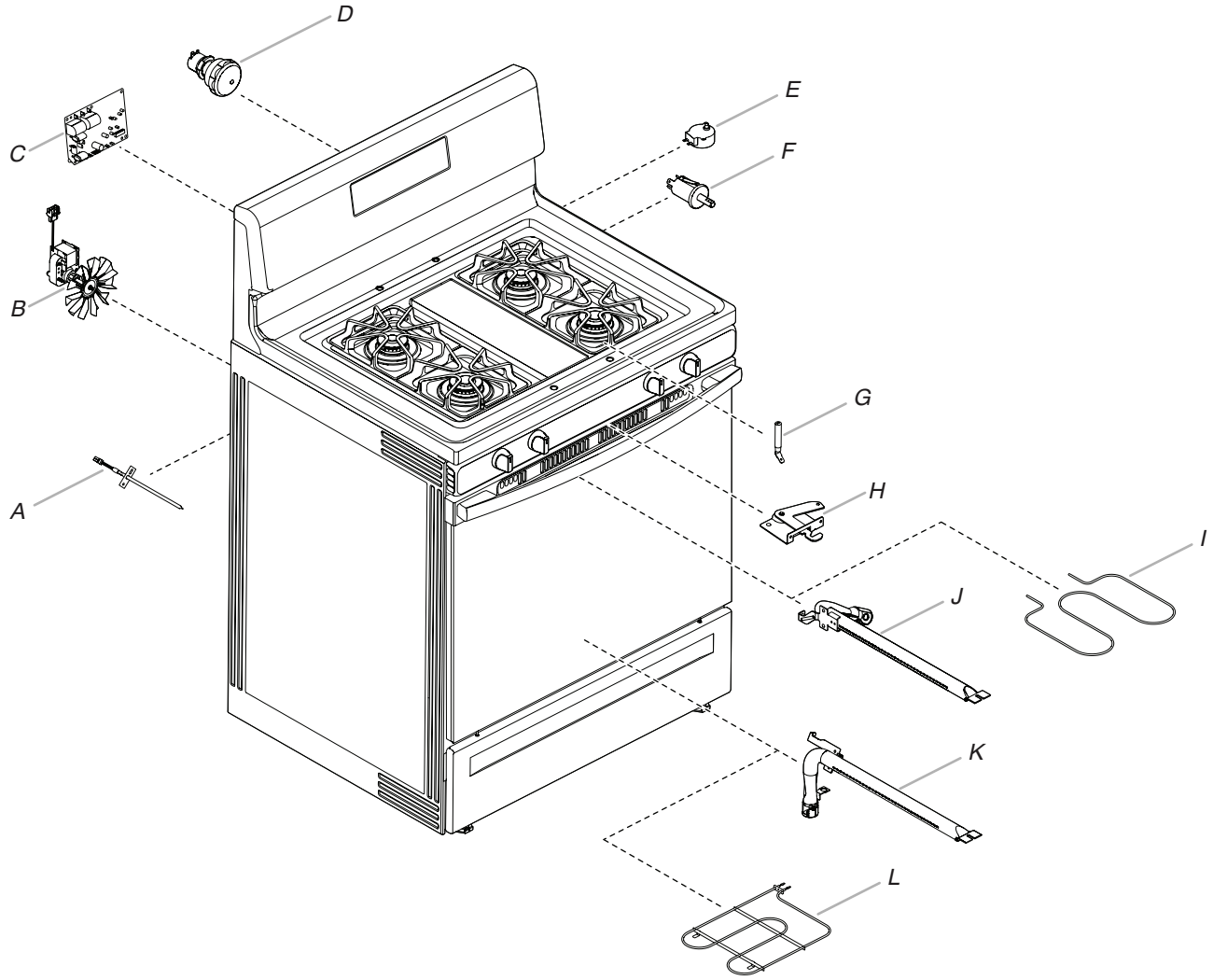

A. Oven Temperature Sensor
B. Convection Fan Motor
C. DSI Board
D. Oven Light
E. Latch Motor
F. Door Switch
G. Burner Electrode
H. Door Latch
I. Broil Element (For Electric Range)
J. Broil Element (For Gas Range)
K. Bake Element (For Gas Range)
L. Bake Element (For Electric Range)

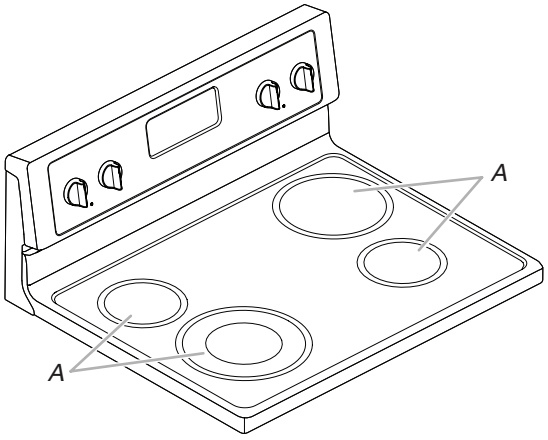

A. Ceran Elements (For Electric Range)

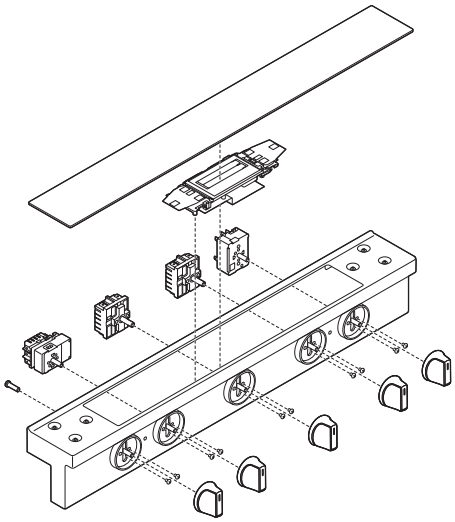

Front Control Console

For Service Technician Use Only

NOTES

Multimedia Enhanced

Section 4: Component Access

This section provides service parts access, removal, and replacement instructions for the "Whirlpool®, Maytag®, KitchenAid®,Kenmore®, JennAir®, IKEA® and Amana® Ranges."

- Cooktop (Front-Control/VSI, Electric)
  - Removing the console
  - Removing the Ceran element
  - Removing the Induction Module
  - Removing the ACU/HMI module
  - Removing the Infinite switches/Burner controls
- Cooktop (Rear-Control/Vesta, Electric)
  - Removing the cooktop
  - Removing the Ceran element
  - Removing the Induction Module
  - Removing the ACU/HMI module
  - Removing the Infinite switches/Burner controls
- Oven (Electric)
  - Accessing the oven components
- Oven (Gas)
  - Accessing the oven components

Video Available Look for this ICON throughout Section 4.

Removing the Console - Front Control Models

WARNING

Electrical Shock Hazard

Disconnect power before servicing.

Replace all parts and panels before operating.

Failure to do so can result in death or electrical shock.

1. Remove oven door for easier access to cooktop fasteners (refer to Installation Instructions for details).

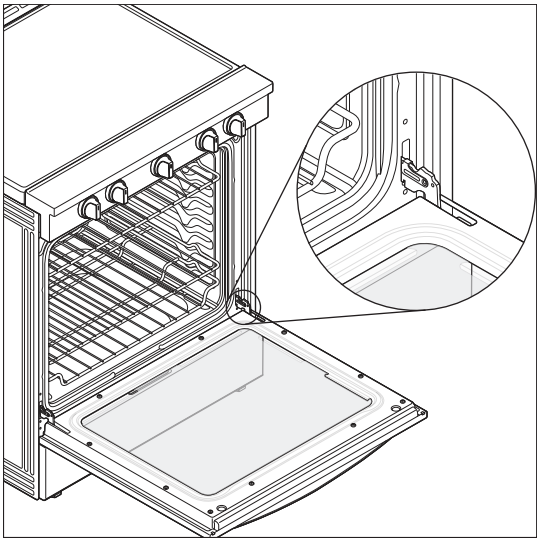

2. Remove the five (5) Phillips head screws from under the front of the console.

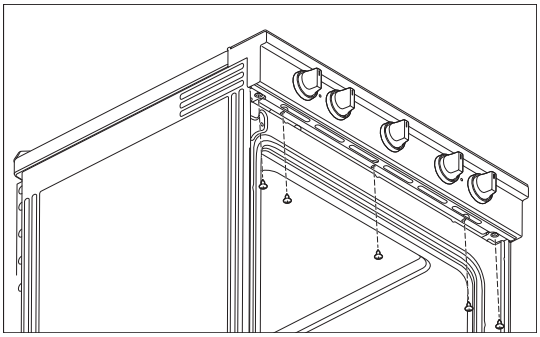

3. Lift console up and out.
   NOTE: Console will rest on the front lip of the bracket.

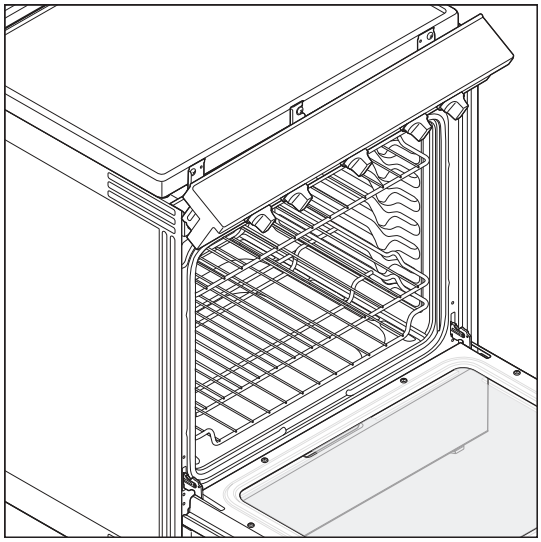

4. Disconnect element harnesses.

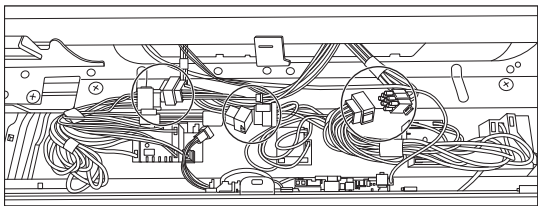

5. Disconnect WiFi antenna and console harness from Indigo module.

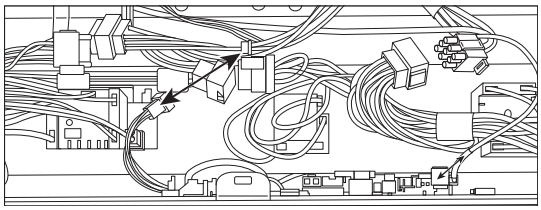

6. Lift console off the bracket and away.
NOTE: At this point, you will have access to the infinite switches (attached to console).

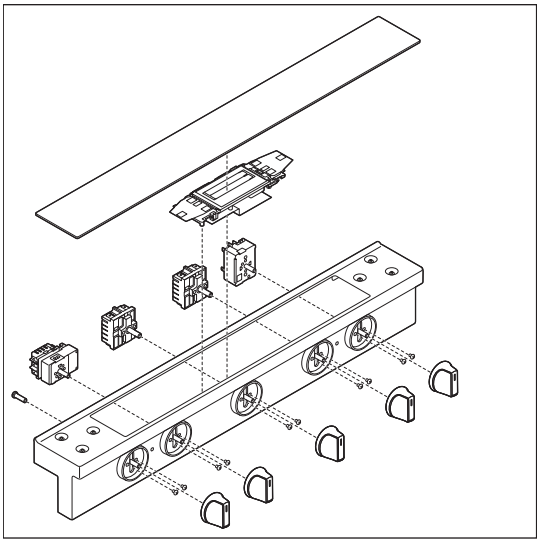

7. Remove the three (3) Phillips Head screws from front of cooktop glass (one in each chassis bracket).

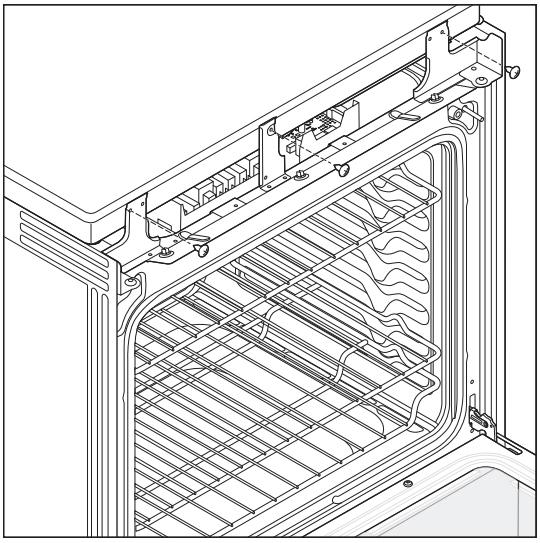

8. Remove 3 Phillips Head screws from Top Vent Trim.

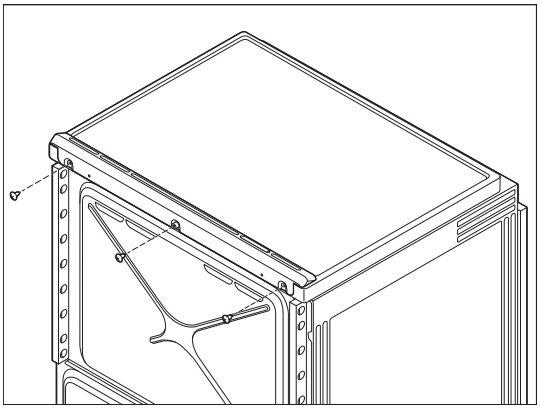

9. Remove Top Vent Trim.

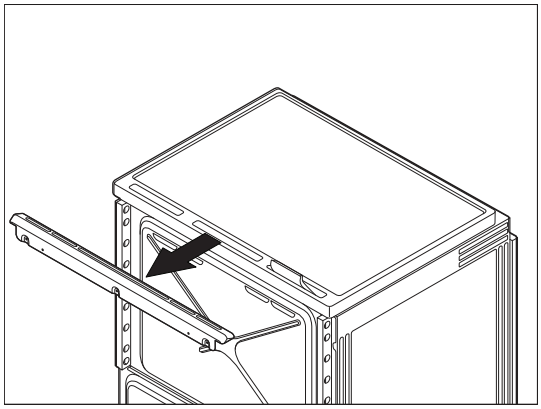

10. Remove Cooktop Glass and set aside. You now have access to the Ceran elements.

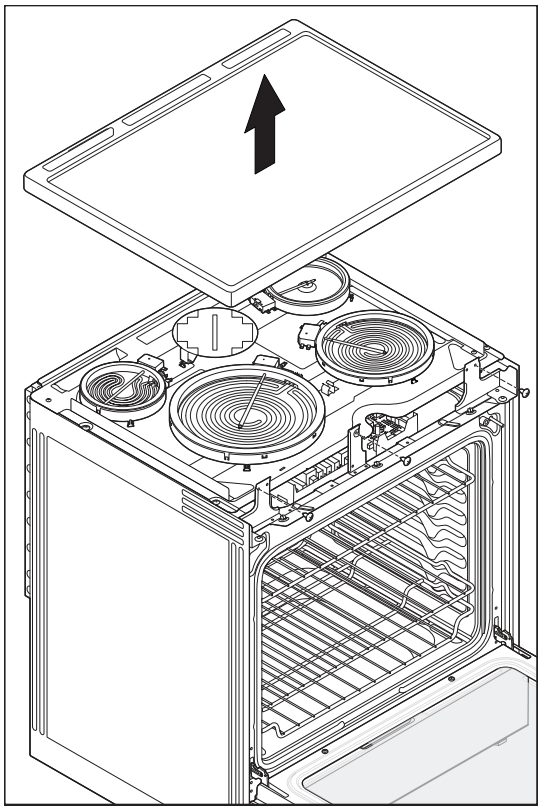

Removing the Ceran Element - Front Control Models

⚠ WARNING

Electrical Shock Hazard

Disconnect power before servicing.

Replace all parts and panels before operating.

Failure to do so can result in death or electrical shock.

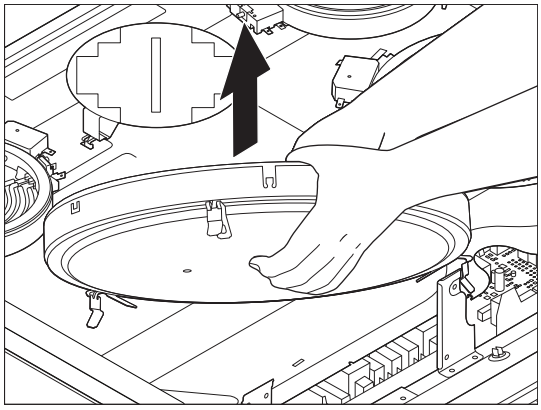

1. Gently move the element from side to side while pulling up until one clip is free, then remove other side and lift away.
   NOTE: Take note of clip's hole position before removing to avoid confusion with multiple holes configurations.

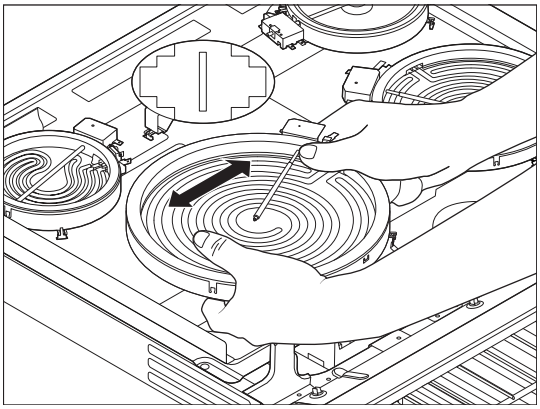

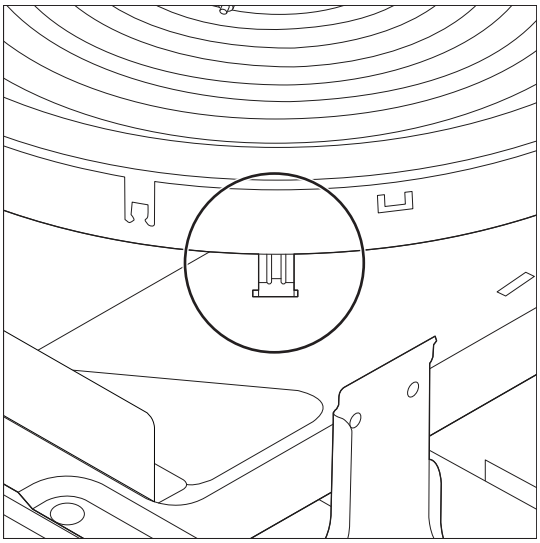

Removing the Induction Module - Front Control Models

WARNING

Electrical Shock Hazard

Disconnect power before servicing.

Replace all parts and panels before operating.

Failure to do so can result in death or electrical shock.

1. Perform the steps 1-10 from **"Removing the Console - Front Control Models"** before performing the following steps.
2. Unscrew and disconnect the burner wires from the module.

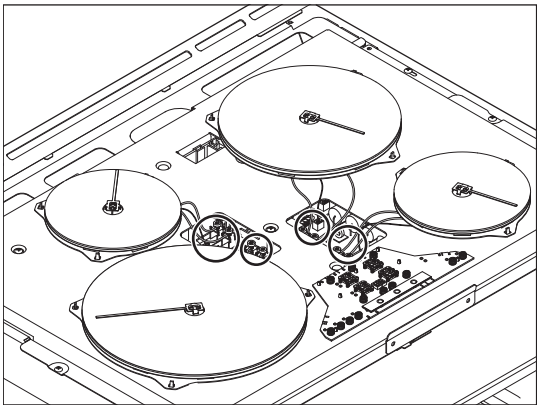

3. Gently move the burner from side to side while pulling up until one clip is free, then remove the other side and lift away.
   NOTE: Take note of the clip's hole position before removing to avoid confusion with multiple holes configurations.

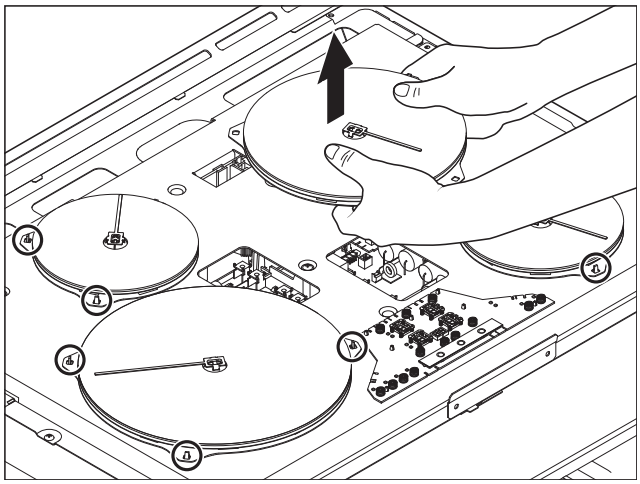

4. Disconnect the connectors from the HMI and module.

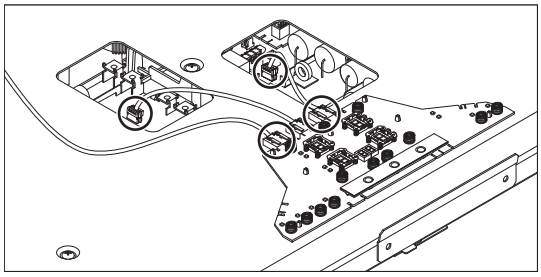

5. Remove eight (8) mounting Phillips head screws from the cover.

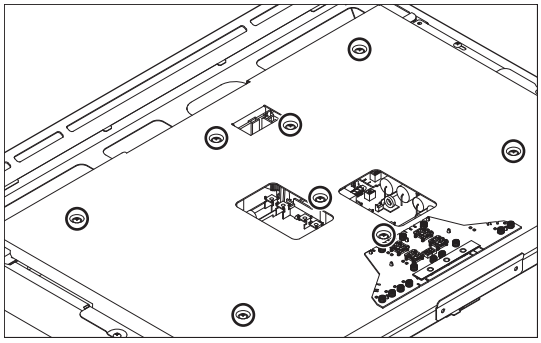

6. Remove the burner plate and set it aside. Now you can access the induction module.

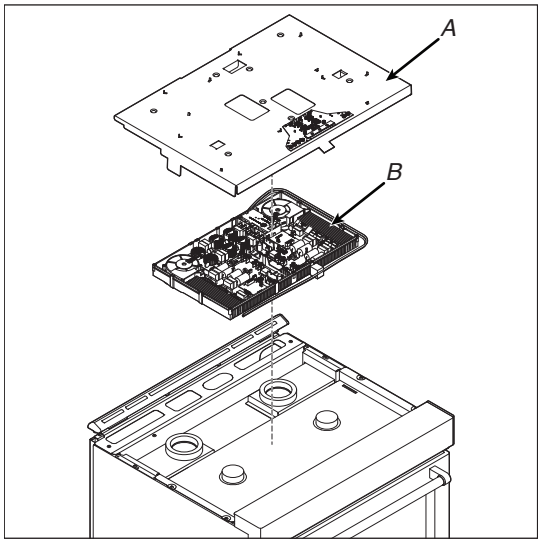

A. Burner Plate
B. Induction Module

Removing the ACU/HMI Module - Front Control Models

⚠ WARNING

Electrical Shock Hazard

Disconnect power before servicing.

Replace all parts and panels before operating.

Failure to do so can result in death or electrical shock.

1. Remove six (6) Phillips head screws from the cooktop pan.

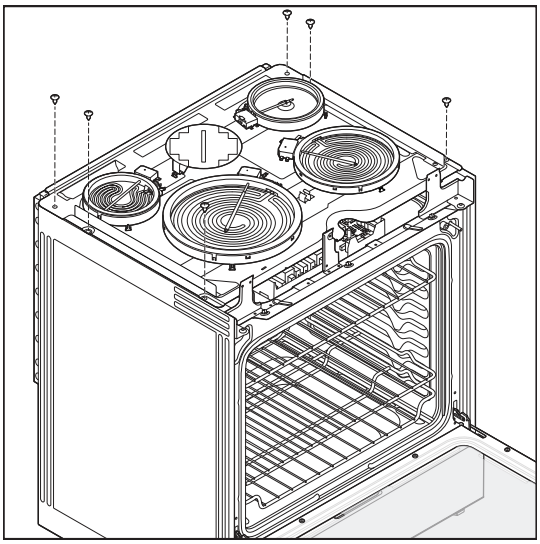

2. Remove cooktop pan with ceran elements and set aside. You now have access to the ACU.

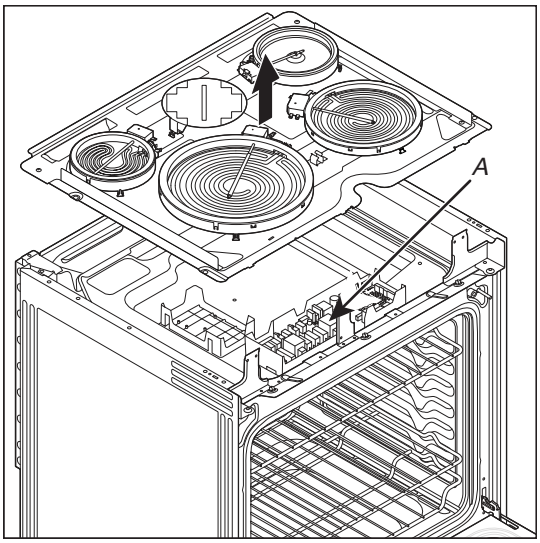

A. ACU

3. Unplug connectors from ACU.
4. Remove three (3) Phillips mounting screws from the ACU/HMI module and remove.

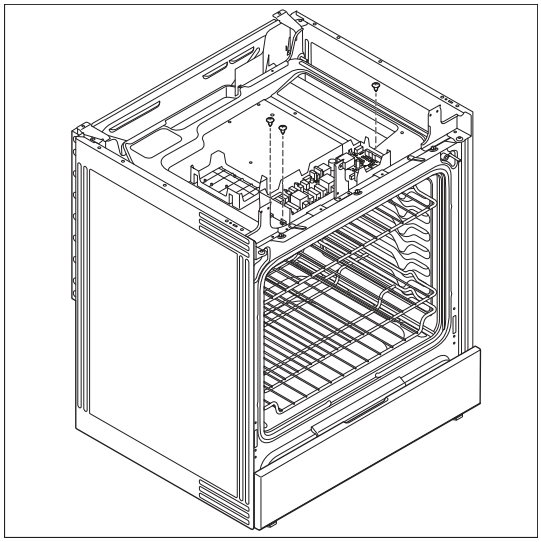

Removing the Infinite Switches/Burner Controls - Front Control Models

⚠ WARNING

Electrical Shock Hazard

Disconnect power before servicing.

Replace all parts and panels before operating.

Failure to do so can result in death or electrical shock.

1. Remove the control knob from the front of the console and place aside.

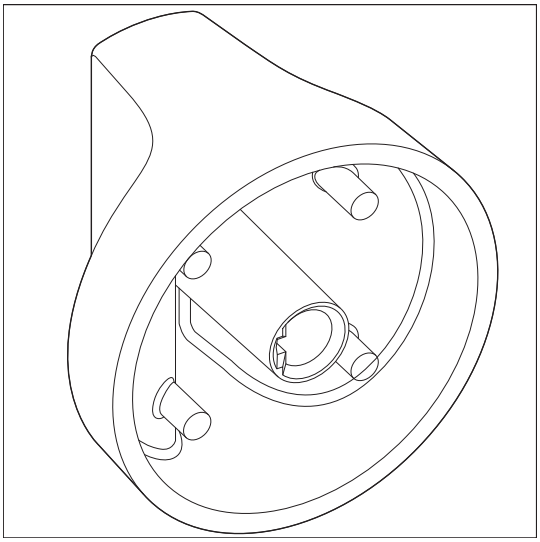

2. Remove the two (2) Phillips head mounting screws.

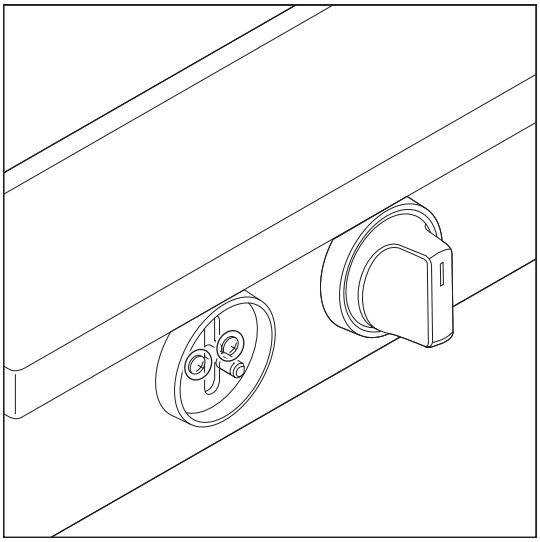

3. Unplug and replace the infinite switch.

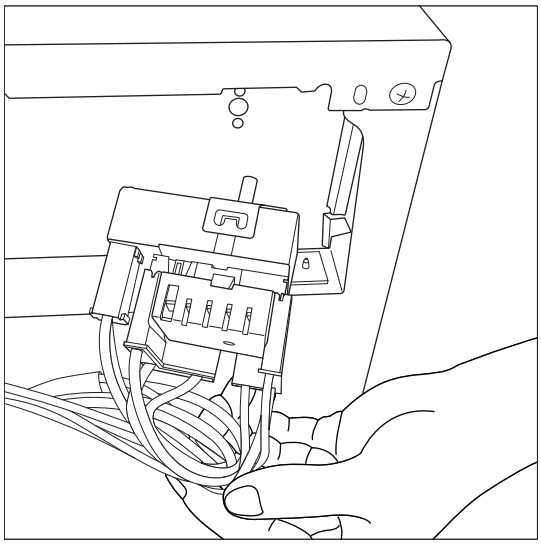

Removing the Cooktop - Rear Control Models

WARNING

Electrical Shock Hazard

Disconnect power before servicing.

Replace all parts and panels before operating.

Failure to do so can result in death or electrical shock.

1. Remove oven door for easier access to cooktop fasteners (refer to Installation Instructions for details).

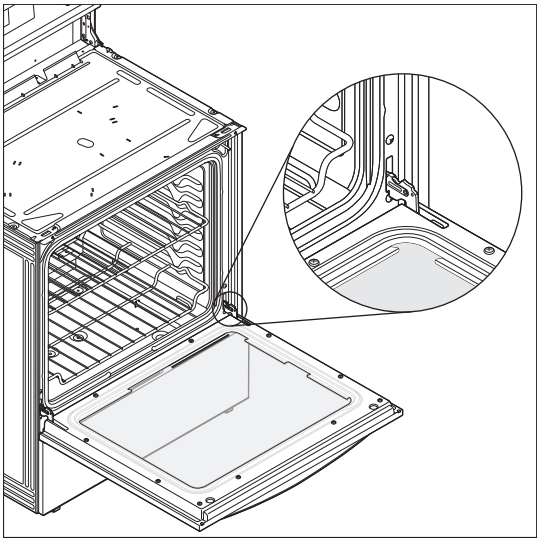

2. Remove the two (2) Phillips head screws from under the front of the cooktop.

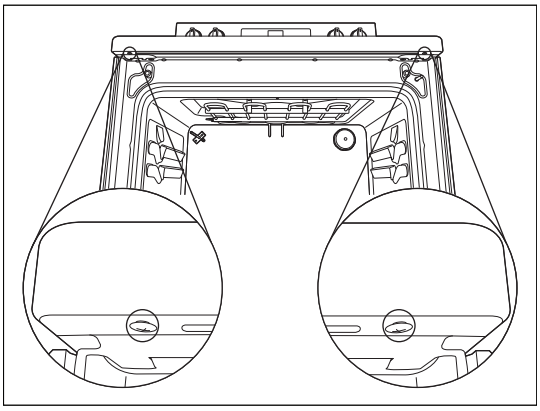

3. Lift up front and pull cooktop out.

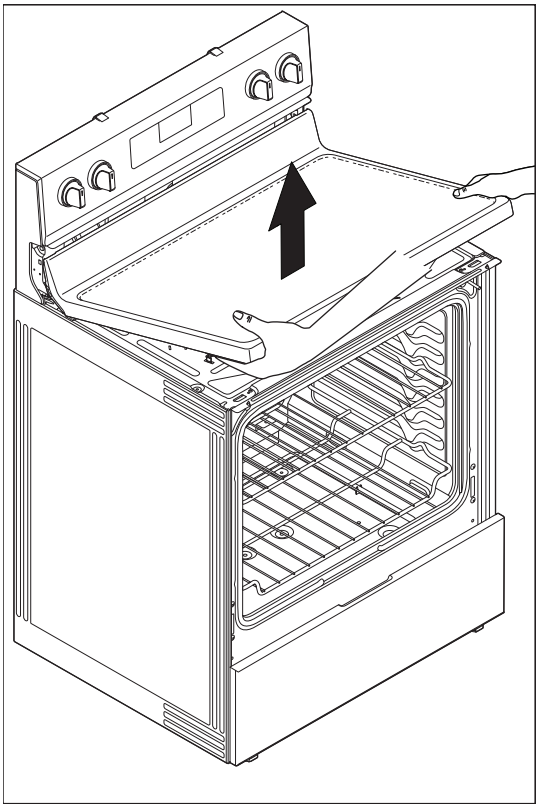

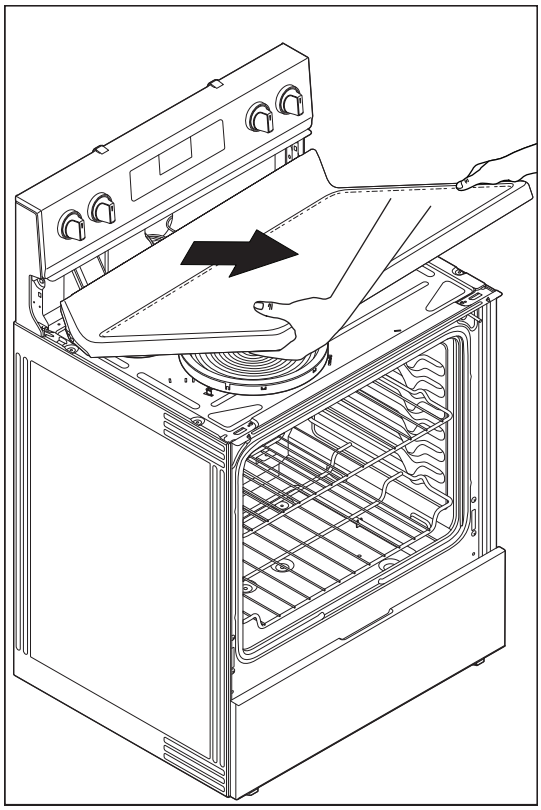

4. Set cooktop glass aside. You now have access to the Ceran elements.

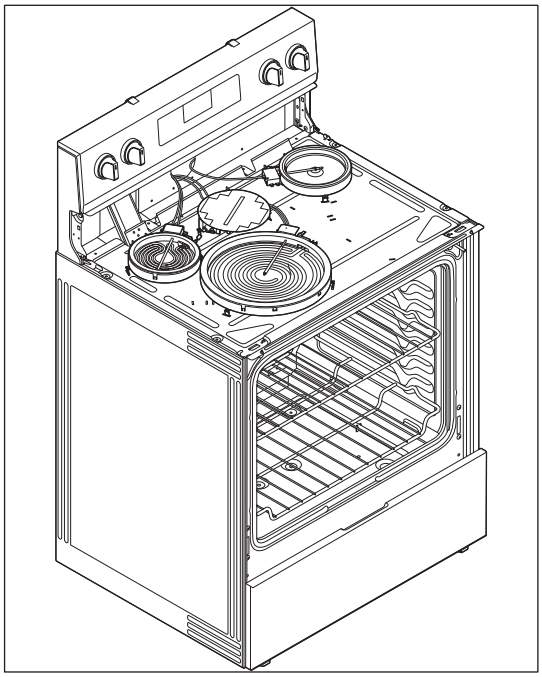

Removing the Ceran Element - Rear Control Models

⚠ WARNING

Electrical Shock Hazard

Disconnect power before servicing.

Replace all parts and panels before operating.

Failure to do so can result in death or electrical shock.

1. Gently move the element from side to side while pulling up until one clip is free, then remove other side and lift away.

NOTE: Take note of clip's hole position before removing to avoid confusion with multiple holes configurations.

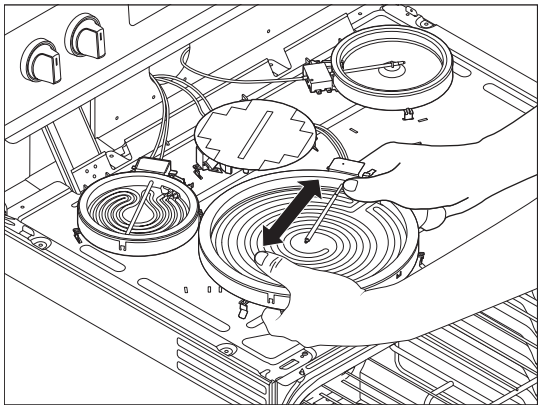

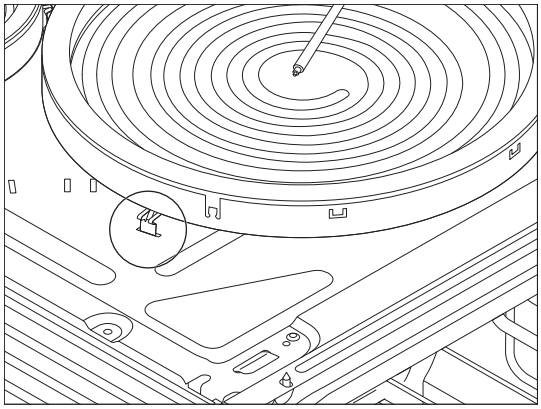

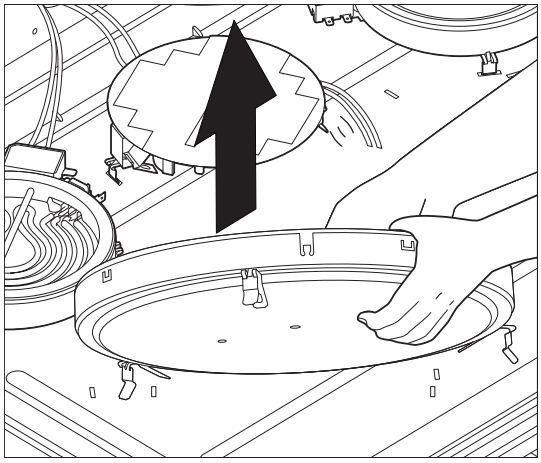

Removing the Induction Module - Rear Control Models

1. Perform the steps 1-4 from **"Removing the Cooktop - Rear Control Models"** before performing the following steps.
2. Unscrew and disconnect the burner wires from the module.

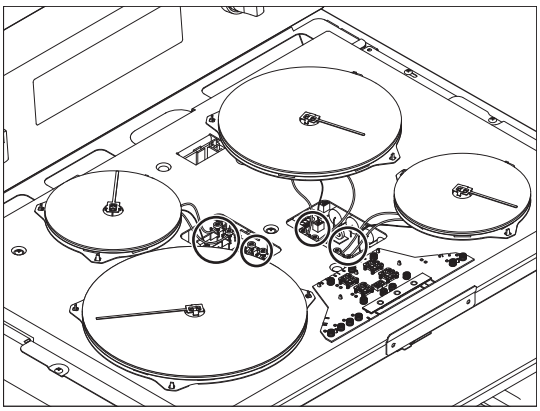

3. Gently move the burner from side to side while pulling up until one clip is free, then remove the other side and lift away.
   NOTE: Take note of the clip's hole position before removing to avoid confusion with multiple holes configurations.

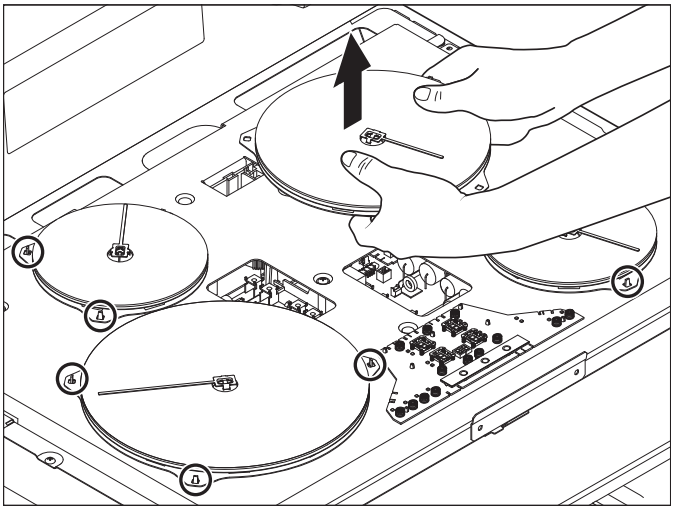

4. Disconnect the connectors from the HMI and module.

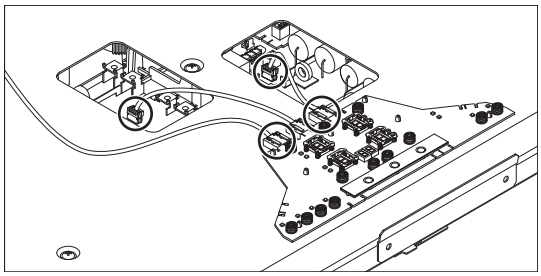

5. Remove eight (8) mounting Phillips head screws from the cover.

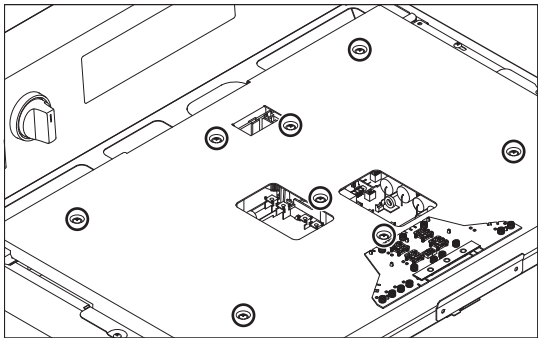

6. Remove the burner plate and set it aside. Now you can access the induction module.

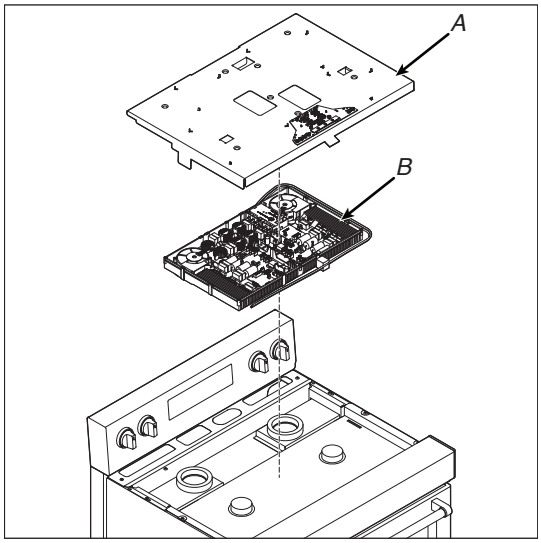

A. Burner Plate
B. Induction Module

Removing the ACU/HMI Module - Rear Control Models

WARNING

Electrical Shock Hazard

Disconnect power before servicing.

Replace all parts and panels before operating.

Failure to do so can result in death or electrical shock.

1. Remove ten (10) Phillips head screws from the top-back panel.

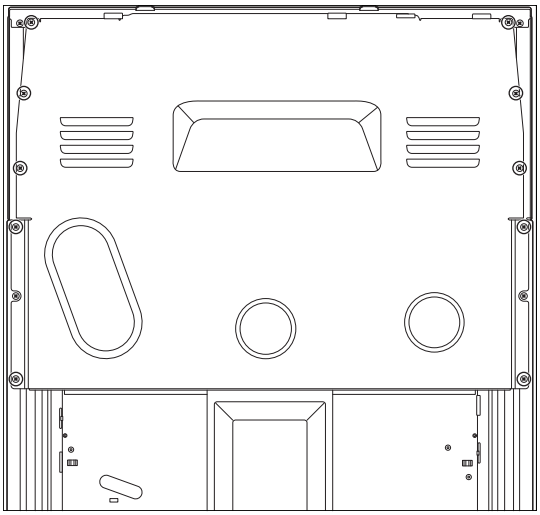

2. Remove top-back panel and set aside.

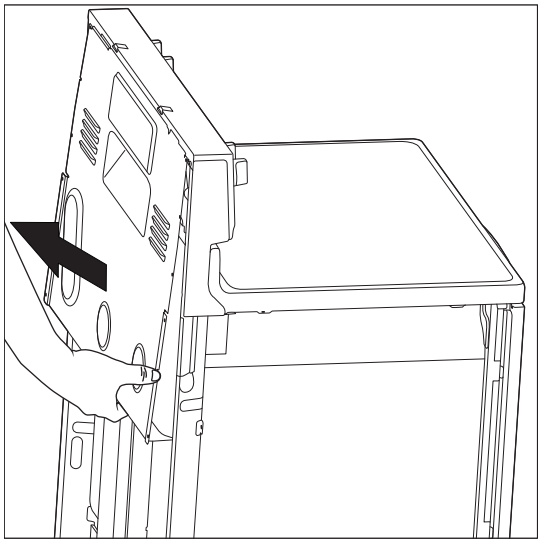

3. You now have access to the following components:

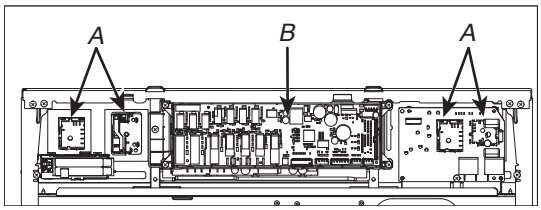

A.Infinite switches/Burner controls
B.ACU/HMI module

4. Unplug connectors from ACU/HMI module.

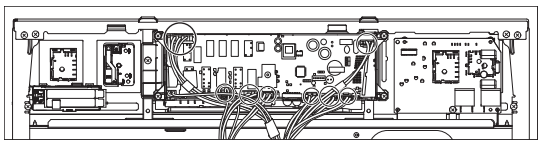

Removing the Infinite Switches/Burner Controls - Rear Control Models

⚠ WARNING

Electrical Shock Hazard

Disconnect power before servicing.

Replace all parts and panels before operating.

Failure to do so can result in death or electrical shock.

1. Remove the control knob from the front of the console and place aside.

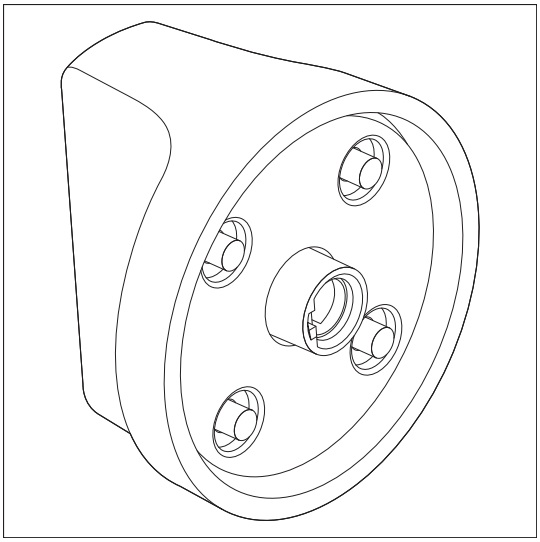

2. Remove the two (2) Phillips head mounting screws.

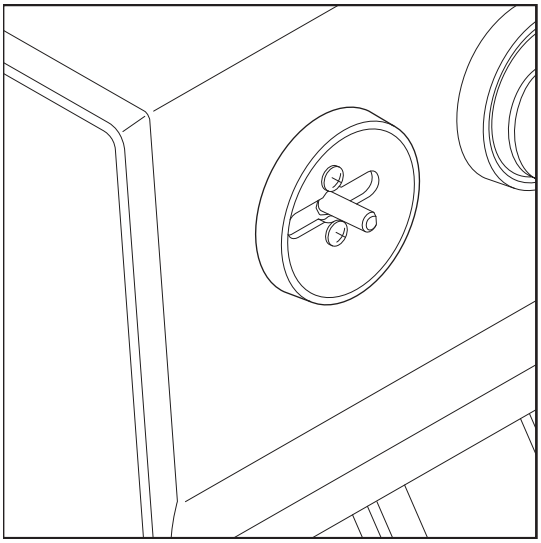

3. Unplug and replace the infinite switch.

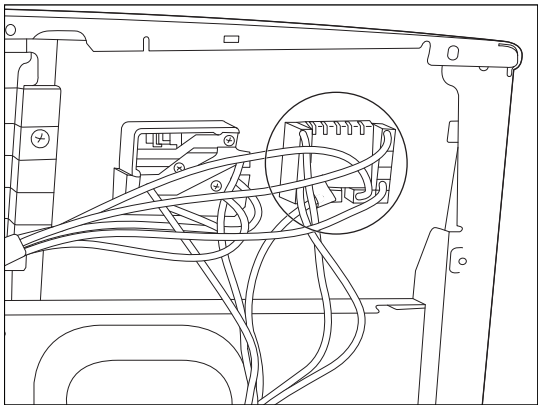

Accessing the Oven Components (Electric)

WARNING

Electrical Shock Hazard

Disconnect power before servicing.

Replace all parts and panels before operating.

Failure to do so can result in death or electrical shock.

1. Remove the two (2) Phillips head screws from bottom power panel.

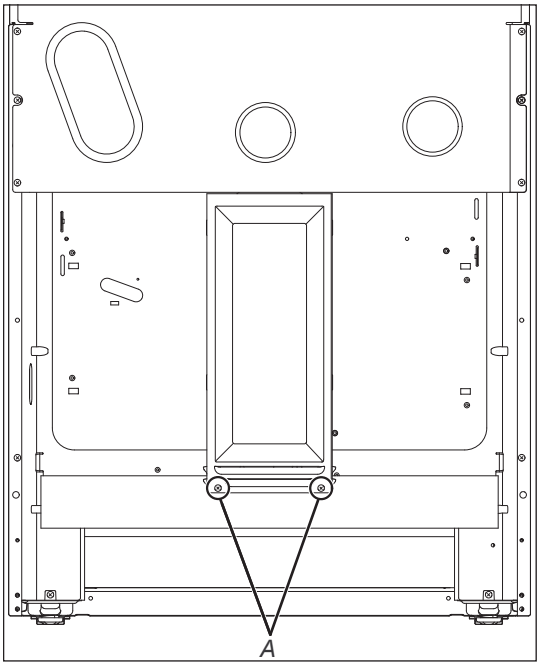

A. Philips screws

2. Remove the ten (10) Phillips head screws from the upper back panel.

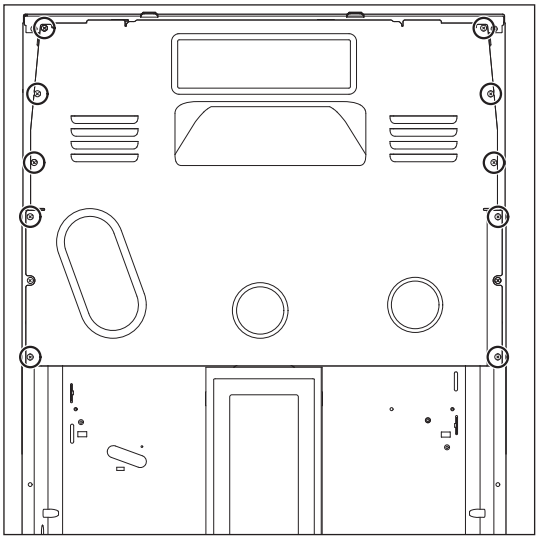

3. You now have access to the following components:

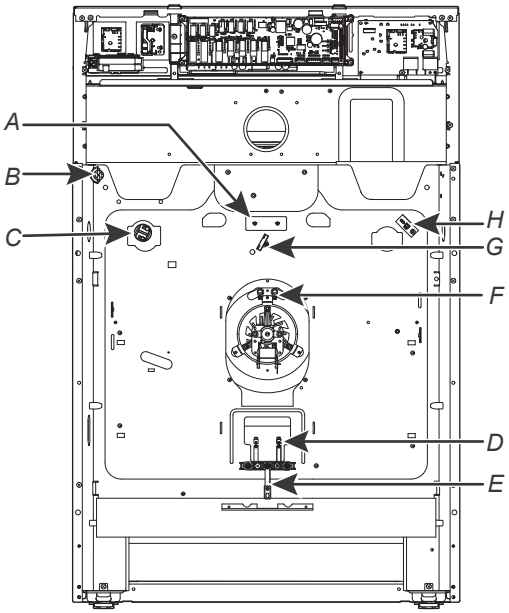

A. Broil element
B. Door switch
C. Oven light
D. Bake element
E. AC input terminal block
F. Convection fan/element
G. Thermal fuse
H. Oven temperature sensor

Accessing the Oven Components (Gas)

WARNING

Electrical Shock Hazard

Disconnect power before servicing.

Replace all parts and panels before operating.

Failure to do so can result in death or electrical shock.

1. Remove the ten (10) Phillips head screws from the back panel.

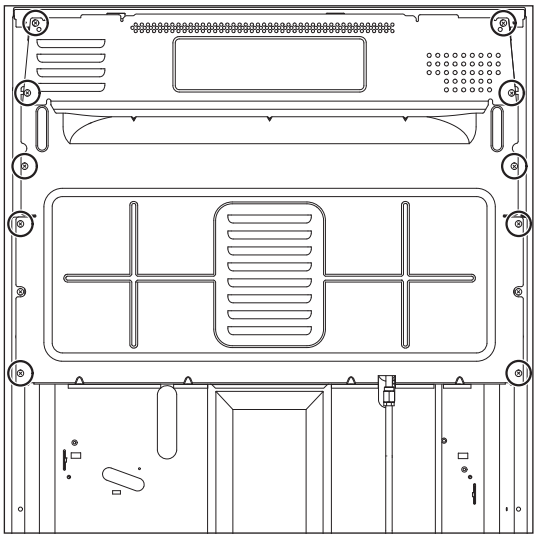

2. Remove back panel and set aside. You now have access to the following components:

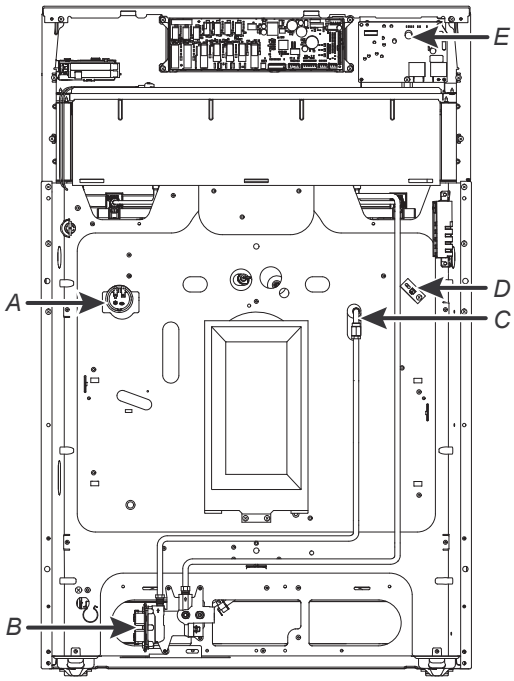

A. Oven Light
B. Gas valve/Regulator/Bake Burner
C. Broil Burner
D. Oven temperature sensor
E. Spark Module (Oven - DSI)

PRODUCT SPECIFICATIONS & WARRANTY INFORMATION SOURCES

IN THE UNITED STATES:

FOR PRODUCT SPECIFICATIONS AND WARRANTY INFORMATION CALL:

FOR WHIRLPOOL PRODUCTS: 1-800-253-1301

FOR TECHNICAL ASSISTANCE WHILE AT THE CUSTOMER'S HOME CALL:

THE TECHNICAL ASSISTANCE LINE: 1-800-832-7174

HAVE YOUR STORE NUMBER READY TO IDENTIFY YOU AS AN AUTHORIZED IN-HOME SERVICE PROFESSIONAL

FOR LITERATURE ORDERS (CUSTOMER EXPERIENCE CENTER):

PHONE: 1-800-851-4605

FOR TECHNICAL INFORMATION AND SERVICE POINTERS:

www.servicematters.com

IN CANADA:

FOR PRODUCT SPECIFICATIONS AND WARRANTY INFORMATION CALL:

1-800-461-5681

FOR TECHNICAL ASSISTANCE WHILE AT THE CUSTOMER'S HOME CALL:

THE TECHNICAL ASSISTANCE LINE: 1-800-488-4791

HAVE YOUR STORE NUMBER READY TO IDENTIFY YOU AS AN AUTHORIZED IN-HOME SERVICE PROFESSIONAL